Mayor
Kenneth Romney

City Engineer/ Zoning Administrator
Ben White

City Recorder
Cathy Brightwell

WEST BOUNTIFUL PLANNING COMMISSION

550 North 800 West
West Bountiful, Utah 84087

Phone (801) 292-4486
FAX (801) 292-6355

Chairman
Denis Hopkinson

Commissioners
Laura Charchenko
Mike Cottle
Alan Malan
Dennis Vest, Alternate

THE WEST BOUNTIFUL PLANNING COMMISSION WILL HOLD A REGULAR MEETING BEGINNING AT 7:30 PM ON TUESDAY, SEPTEMBER 25, 2018 AT THE CITY OFFICES

Prayer/Thought by Invitation

1. Accept Agenda.
2. Presentation Regarding Design for New West Bountiful Elementary School.
3. Consider Conditional Use Application from John Nelson for a Detached Garage with a Height of 25 ft. 9 inches.
4. Discuss Preliminary Plat for Atwater (Grover) Subdivision at 1811 N 800 West.
5. Consider Recommendation to City Council Regarding Title 17-Yard Regulations, Regarding Setbacks for Covered Patios.
6. Discuss Proposed Changes to Title 16 – Subdivisions.
7. Staff report.
8. Consider Approval of Minutes from September 11, 2018 meeting.
9. Adjourn.

- -

Individuals needing special accommodations including auxiliary communicative aids and services during the meeting should notify Cathy Brightwell at 801-292-4486 twenty-four (24) hours before the meeting.

This notice has been sent to the Clipper Publishing Company and was posted on the State Public Notice website and the City's website on September21, 2018 by Cathy Brightwell, City Recorder.

MEMORANDUM

TO: **Planning Commission**
DATE: **September 20, 2018**
FROM: **Ben White**
RE: **Nelson-Accessory Structure**
964 West Meadow Lark Ln (corner lot on 1850 North)

Mr. Nelson desires to construct a 35'x60' detached garage west of his existing house.

Summary

1. The garage will be 10 ft. from the house and 10 ft. from the west property line.
2. The garage will be 20 ft. from 1850 North.
3. The highest gable on the house is about 27 ft tall. The attached garage gable is about 16 ft.
4. The brick accessory building southwest of Mr. Nelson's and seen in the background of photos is 19 ft. tall.
5. The building façade proposed is metal.
6. The request is for a 25 ft. 9 in. tall garage.
7. A 35'x60' accessory building complies with the City's 35% rear yard regulation.

Conditional Use Requirements

As stated in Section 17.60.040(D), a motion needs to consider the following:

1. The proposed use at the particular location is necessary or desirable to provide a service or facility that will contribute to the general well-being of the neighborhood and the community;
2. The proposed use will not be detrimental to the health, safety, or general welfare of persons residing or working in the vicinity, or injurious to property or improvements in the vicinity;
3. The proposed use and/or accompanying improvements will not inordinately impact schools, utilities, and streets;
4. The proposed use will provide for appropriate buffering of uses and buildings, proper parking and traffic circulation, the use of building materials and landscaping which are in harmony with the area, and compatibility with adjoining uses;
5. The proposed use will comply with the regulations and conditions specified in the land use ordinance for such use;
6. The proposed use will conform to the intent of the city's general plan; and
7. The conditions to be imposed in the conditional use permit will mitigate the reasonably anticipated detrimental effects of the proposed use and accomplish the purposes of this subsection.

CONDITIONAL USE PERMIT APPLICATION

West Bountiful City
PLANNING AND ZONING
550 N 800 W, West Bountiful, UT 84087
Phone: (801) 292-4486
www.wbcity.org

PROPERTY ADDRESS: 963 West MeadowLark Lane

PARCEL NUMBER: **ZONE:** **DATE OF APPLICATION:** 9/14/18

Name of Business:

Applicant Name: John Nelson

Applicant Address: 963 west Meadowlark

Primary phone: 801-750-5021 Fax Number:

E-mail address: jnelson@skyline.us

Describe in detail the conditional use for which this application is being submitted. Attach a site plan which clearly illustrates the proposal. A separate sheet with additional information may be submitted if necessary.

I am seeking permission to build a detached garage on my property with an overall peak roof height of 25' 9". The eve height will be 17'. I choose this design to match not only the pitch of my ~~homes roof but also all my neighbors homes and out buildings. All of the homes in my area are~~ 30'-35' high. My home, which the garage will be adjacent to, is 35'+ tall. I could change the pitch of the roof to lower the overall peak height but in my opinion it will be more of an eye sore. Buildings should all match and be symmetrical architecturally. I am paying about $3000 extra for this roof pitch.

The Applicant(s) hereby acknowledges that they have read and are familiar with the applicable requirements of Title 17.60 of the West Bountiful City Code, pertaining to the issuance of Conditional Use Permits. If the applicant is a corporation, partnership or other entity other than an individual, this application must be in the name of said entity, and the person signing on behalf of the Applicant hereby represents that they are duly authorized to execute this Application on behalf of said entity.

Fee must accompany this application - $20 for Residential Zone, $50 for Business Zone

I hereby apply for a Conditional Use Permit from West Bountiful City in accordance with the provisions of Title 17, West Bountiful Municipal Code. I certify that the above information is true and correct to the best of my knowledge. I understand the information on this application may be made available to the public upon request

Date: 9/14/18 Applicant Signature:

FOR OFFICIAL USE ONLY

Application Received Date: 9/14/18 Permit Number: 18-009

Application Fee Received Date: 9/17/18 Permit Approval Date:

Fee: ✓ $20 Residential ____ $50 Commercial

Revised May 2015

963 west Meadowlark lane

Untitled Map

Write a description for your map.

Legend

MBCU 2008230
2261

DATE: Sep 11, 2018

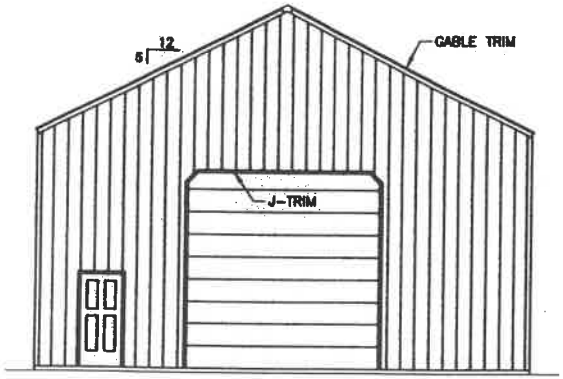

GABLE END ELEVATION

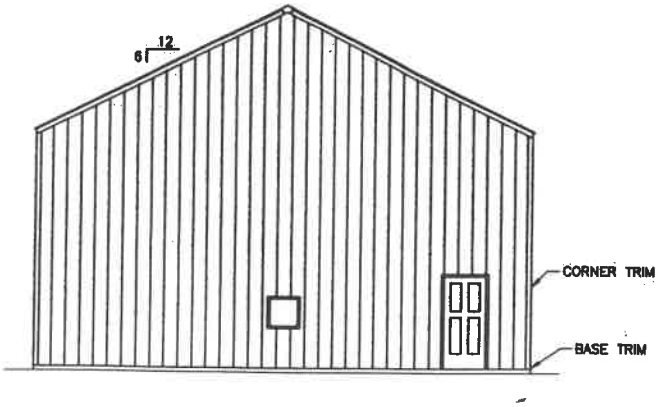

GABLE END ELEVATION

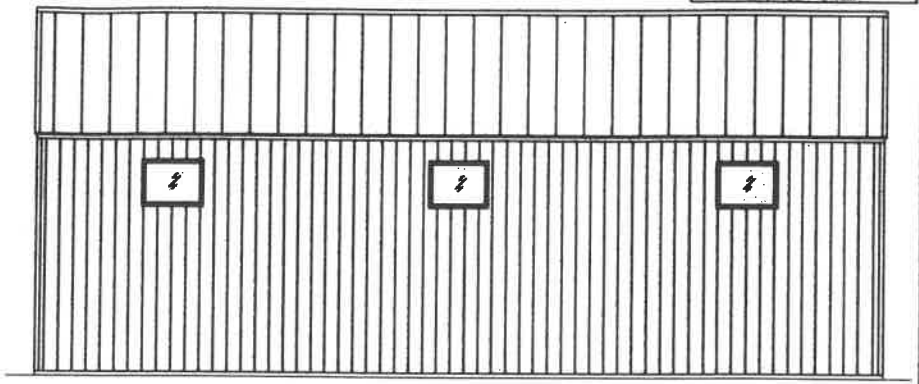

SIDE ELEVATION

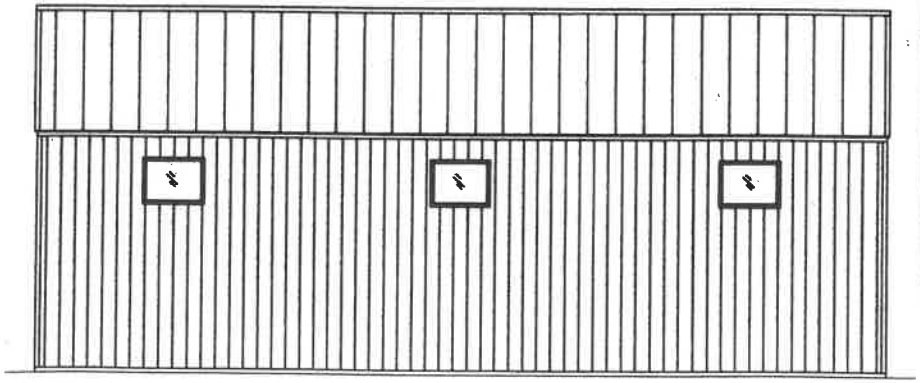

SIDE ELEVATION

REGISTERED PROFESSIONAL ENGINEER
#7589454-2202
JAMES DEREK LLOYD
09/11/2018
STATE OF UTAH

ENGINEER STAMP

MOUNTAIN POINT ENGINEERING

ELEVATIONS

JOHN NELSON BUILDING

WEST BOUNTIFUL, UTAH

PROJECT	B04
SCALE	1/8" = 1'-0"
DATE	09/11/2018
SHEET	06

MEMORANDUM

TO: **Planning Commission**

DATE: **September 19, 2018**

FROM: **Ben White**

RE: **Preliminary Plat Review for Atwater Estates Subdivision at 1811 N 800 West**

Pembridge Heathrow Holdings is proposing a 12-lot residential development (Atwater Estates) located 1811 N 800 West. The concept plan was discussed during the May 22nd Planning Commission meeting. The twelve lots meet the required R-1-10 zoning requirements for size and width. On June 5th, the City Council approved cutting the asphalt street to accommodate utility services for the two proposed cul-de-sacs.

Staff has also received "will serve" letters from the major utility companies and a soils report. Water rights associated with the property should be deeded to the city to fulfill the water right requirement.

Items of interest:

1. The existing brick house is proposed to remain. The older siding house and out buildings are to be demolished.
2. The gas easement is shown along UTA trail property. Unlike other properties in the area, the gas line is on UTA property and not private property.
3. The city installed sewer and water services as part of the road reconstruction project in 2014. The developer will need to reimburse the city for the service lines used. But this will limit the excavations into 800 West to the two cul-de-sac locations. Public Works will determine what the best way to patch the road will be.
4. Drainage will be directly into the DSB canal. A sealed manhole will most likely be required in 800 West. Check valves will be needed on the rear yard drains too.

Items needing to be addressed:

A. Provide a street lighting plan. There is an existing street light near the Wilson Court cul-de-sac. There is also a street light near the northeast corner of Lot 1. Both the proposed and existing street lights should show on the drawings.
B. County approval for drainage into DSB canal
C. Street monuments are required in 800 West and in cul-de-sacs.
D. A more detailed grading plan will be required with final plat to determine the extent of work required to connect to the existing asphalt on 800 West and final rear yard drain locations.
E. The storm drain line should be installed in front of the gutter with combo storm drain boxes. This will also avoid conflicts with the gas and power poles.

ATWATER ESTATES

PRELIMINARY PLAT

WEST BOUNTIFUL CITY, UTAH

GRAPHIC SCALE

250' 0 125' 250' 500' 1000'

(IN FEET)
1 inch = 250 ft.

OWNER/DEVELOPER:
JUSTIN ATWATER
PEMBRIDGE HEATHROW HOLDINGS
(801) 913-0258

VICINITY MAP

50' STANDARD CROSS SECTION

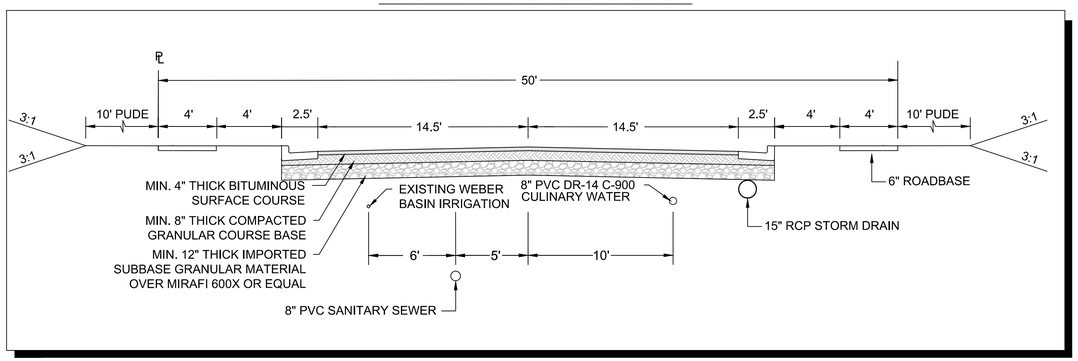

SURVEYOR'S CERTIFICATE

I, MICHAEL L. WANGEMANN, SYRACUSE, UTAH, DO HEREBY CERTIFY THAT I AM A LICENSED LAND SURVEYOR AND THAT I HOLD LICENSE NO. 6431156 AS PRESCRIBED BY THE LAWS OF THE STATE OF UTAH AND THAT I HAVE MADE A SURVEY OF THE BOUNDARIES OF THE FOLLOWING DESCRIBED PROPERTY. I FURTHER CERTIFY THAT BY AUTHORITY OF THE OWNERS, I HAVE MADE A SURVEY OF THE TRACT(S) OF LAND SHOWN ON THIS PLAT AND DESCRIBED BELOW, AND HAVE SUBDIVIDED SAID TRACT(S) OF LAND INTO LOTS, HEREAFTER TO BE KNOWN AS THE

ATWATER ESTATES

AND THAT SAME HAS BEEN CORRECTLY SURVEYED AND STAKED ON THE GROUND AS SHOWN ON THIS PLAT.

Michael L. Wangemann, PLS
Date of Plat or Map: September 18, 2018
PLS# 6431156-2201

PROFESSIONAL LAND SURVEYOR
MICHAEL L. WANGEMANN
No. 6431156
STATE OF UTAH

LEGEND

4250	MAJOR PROPOSED CONTOUR
	MINOR PROPOSED CONTOUR
4250	MAJOR EXISTING CONTOUR
	MINOR EXISTING CONTOUR
	OVERALL PROPERTY BOUNDARY
	CENTERLINE
	8" PVC C900 DR-14 WATER LINE
	EXISTING 8" WATER LINE
	8" PVC SDR 35 SEWER LINE (4" LAT)
	EXISTING 8" SEWER LINE
	4" SECONDARY WATER PVC C900 LINE
	EXISTING 4" SW PVC C900 LINE
	15" RCP CLASS III STORM DRAIN LINE
	EXISTING 15" STORM DRAIN LINE
	4' or 5' Ø MANHOLE
	CITY STANDARD FIRE HYDRANT
	8" WATER/SECONDARY WATER VALVE
	INLET BASIN

NO.	DATE	REVISION

DRAWING IS NOT TO SCALE IF BAR DOES NOT MEASURE 1 INCH
0 1/2 1

ATWATER ESTATES
PRELIMINARY PLAT
WEST BOUNTIFUL CITY, DAVIS COUNTY, UTAH

Scott R. McFarland, PE
Project Manager
347 East 375 South
Kaysville, Utah 84037
801.726.6797 (H)
sprmcf@yahoo.com

MEA
MCFARLAND ENGINEERING & ASSOCIATES, INC

REGISTERED PROFESSIONAL ENGINEER
SCOTT R. MCFARLAND
No.504870
9-18-18
STATE OF UTAH

DESIGN:	SPM
DRAWN:	SPM
CHECKED:	SRM
DATE:	9-18-18

SHEET:
P1

L:\MEA\1707 - West Bountiful Subdivision\00-Cadd\00-Base\West Bountiful Construction Set.dwg Sep 18, 2018 - 9:23pm

ATWATER ESTATES

PRELIMINARY PLAT

WEST BOUNTIFUL CITY, UTAH

LEGAL DESCRIPTION

BEGINNING AT A POINT ON THE WEST RIGHT-OF-WAY LINE OF ONION STREET (AKA 800 WEST STREET), SAID POINT BEING SOUTH 89°59'21" WEST ALONG THE QUARTER SECTION LINE 215.89 FEET AND NORTH 00°14'19" EAST ALONG SAID WEST RIGHT-OF-WAY LINE 207.13 FEET FROM THE CENTER OF SECTION 13, TOWNSHIP 2 NORTH, RANGE 1 WEST, SALT LAKE BASE AND MERIDIAN; AND RUNNING THENCE NORTH 89°50'53" WEST 335.77 FEET TO THE EASTERLY RIGHT-OF-WAY LINE OF THE D&RGW RAILROAD RIGHT-OF-WAY LINE; THENCE NORTH 09°01'58" EAST ALONG SAID RAILROAD RIGHT-OF-WAY LINE 590.65 FEET TO THE SOUTHERLY RIGHT-OF-WAY LINE OF THE DAVIS COUNTY CANAL; THENCE NORTHEASTERLY ALONG SAID CANAL RIGHT-OF-WAY LINE THE FOLLOWING TWO (2) COURSES: THENCE NORTHEASTERLY 47.81 FEET ALONG THE ARC OF A 93.60 FOOT RADIUS NON-TANGENT CURVE THROUGH A CENTRAL ANGLE OF 29°15'58" (WHICH LONG CHORD BEARS NORTH 45°58'56" EAST 47.29 FEET); THENCE NORTH 24°40'50" EAST 152.19 FEET; THENCE SOUTH 89°45'46" EAST 148.63 FEET TO SAID WEST RIGHT-OF-WAY LINE OF ONION STREET; THENCE SOUTH 00°14'19" WEST ALONG SAID WEST RIGHT-OF-WAY LINE 754.76 FEET TO THE POINT OF BEGINNING.

CONTAINS 201,955.12 SQ/FT OR 4.64 ACRES.

CURVE TABLE						
CURVE	LENGTH	RADIUS	DELTA	TAN	CHORD	CHORD BRG
C1	47.81'	93.60'	29°15'58"	24.44'	47.29'	S45°58'56"W
C2	34.56'	22.00'	90°00'00"	22.00'	31.11'	N45°14'19"E
C3	30.77'	25.00'	70°31'44"	17.68'	28.87'	S54°29'49"E
C4	50.25'	50.00'	57°34'48"	27.48'	48.16'	S48°01'22"E
C5	82.17'	50.00'	94°09'16"	53.76'	73.23'	N56°06'36"E
C6	56.84'	50.00'	65°07'47"	31.93'	53.83'	N23°31'56"W
C7	29.38'	50.00'	33°39'52"	15.13'	28.96'	N72°55'45"W
C8	34.56'	22.00'	90°00'00"	22.00'	31.11'	N44°45'41"W
C9	34.56'	22.00'	90°00'00"	22.00'	31.11'	N45°14'19"E
C10	23.52'	50.00'	26°56'53"	11.98'	23.30'	N76°45'53"E
C11	55.23'	50.00'	63°17'26"	30.81'	52.47'	N31°38'43"E
C12	78.41'	50.00'	89°50'53"	49.87'	70.62'	N44°55'27"W
C13	61.47'	50.00'	70°26'32"	35.30'	57.67'	S54°55'51"W
C14	30.77'	25.00'	70°31'44"	17.68'	28.87'	S54°58'27"W
C15	34.56'	22.00'	90°00'00"	22.00'	31.11'	N44°45'41"W

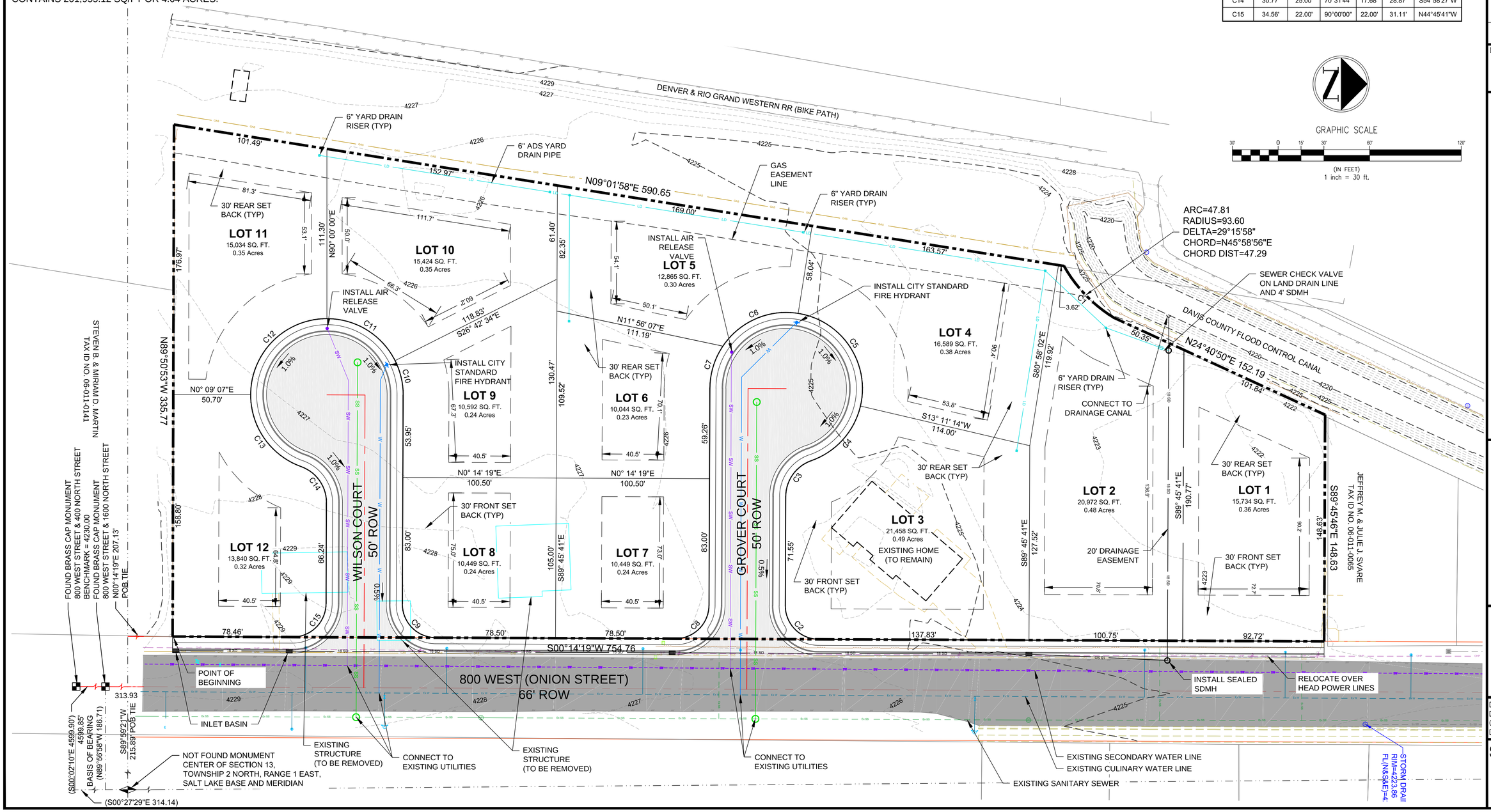

NO.	DATE	REVISION

DRAWING IS NOT TO SCALE IF BAR DOES NOT MEASURE 1 INCH

0 1/2 1

ATWATER ESTATES
PRELIMINARY PLAT
WEST BOUNTIFUL CITY, DAVIS COUNTY, UTAH

Scott P. McFarland, PE
Project Manager
347 East 1075 South
Kaysville, Utah 84037
801.726.6797 (W)
spmcf@yahoo.com

MEA
MCFARLAND ENGINEERING & ASSOCIATES, INC

REGISTERED PROFESSIONAL ENGINEER
SCOTT P. MCFARLAND
No.5048701
9-18-18
STATE OF UTAH

DESIGN:	SPM
DRAWN:	SPM
CHECKED:	SRM
DATE:	9-18-18

SHEET:
P2

L:\MEA\1707 - West Bountiful Subdivision\00-Cadd\00-Base\West Bountiful Construction Set.dwg Sep 18, 2018 - 9:23pm

Mayor
Kenneth Romney

City Council
James Ahlstrom
James Bruhn
Kelly Enquist
Mark Preece
Andrew Williams

WEST BOUNTIFUL CITY

550 North 800 West
West Bountiful, Utah 84087

Phone (801) 292-4486
Fax (801) 292-6355
www.WBCity.org

City Administrator
Duane Huffman

City Recorder
Cathy Brightwell

City Engineer
Ben White

Public Works Director
Steve Maughan

September 25, 2018

Dear Mayor and City Council,

At your direction, the Planning Commission undertook the task to evaluate whether allowing covered patios in the rear yard setback would be permissible, and if so, under what circumstances. A sketch provided by Mr. Steve Sundstrom was used as a visual example of what a covered patio may look like.

The opinion of the majority of the Planning Commission is that the rear building setbacks should stay as they are currently approved. Rationale for leaving the setbacks unaltered include:

1. While a five- or ten-foot encroachment of a patio cover may not seem intrusive in some applications, any rear yard setback encroachment would be an intrusive encroachment in a different setting.
2. While an eight or ten-foot high canopy may not be intrusive in one application, it could be in another.
3. Is any railing acceptable under a covered patio? Screening for mosquitoes or removable windows? Where does the boundary end?
4. Allowing patio roofs while restricting low to the ground deck roofs would be inconsistent.
5. The open area around homes is one of the desirable qualities contributing to the quality of life in West Bountiful. Reducing setbacks to allow larger structures has a similar negative impact as increasing development density.

The Planning Commission is not unanimous in its opinion. There is some support to consider covered patio encroachments into a rear yard setback as a conditional use with strict limitations. Unless the City Council requests the Planning Commission to hold a public hearing on the matter, the Planning Commission considers its deliberation of the subject complete.

Respectfully,

Dennis Hopkinson, Chair
West Bountiful Planning Commission

16 Subdivisions

- 16.04 Introductory Provisions
- 16.08 Administration And Enforcement
- 16.12 Design Requirements
- 16.16 Maps Or Plans
- 16.20 Improvements
- 16.24 Variances And Appeals
- 16.28 Drainage And Subsurface Water Control

16.04 Introductory Provisions

- 16.04.010 Purpose
- 16.04.020 Definitions

16.04.010 Purpose

The purpose of this title, including any rules, regulations, standards and specifications is:

A. To promote and protect the public health, safety and general welfare;
B. To regulate future growth and development within the city in accordance with the general plan and to promote the efficient and orderly growth of the city;
C. To provide procedures and standards for the physical development of subdivisions of land and construction of buildings and improvements within the city;
D. To provide for adequate light, air, and privacy; to secure safety from fire, flood and other dangers; and to prevent overcrowding of land and undue congestion of population; and
~~E.~~ To provide for harmonious and coordinated development of the city and to assure sites suitable for building purposes ~~and human habitation.~~
E. *Adopted by Ord. 374-15 on 11/18/2015*

16.04.020 Definitions

The following words and phrases, as used in this title, shall have the respective meanings set forth hereafter, unless a different meaning clearly appears from the context. Whenever any words or phrases used herein are not defined, but are defined in related sections of the Utah Code or in the zoning ordinances of the city, such definitions are incorporated herein and shall apply as though set forth herein in full.

"**Advisory body**" means a body of selected members that:

1. Provides advice and makes recommendations to another person or entity who makes policy for the benefit of the general public;
2. Is created by and whose duties are provided by statute or by executive order; and
3. Performs its duties only under the supervision of another person or entity as provided by statute. (Definition derived from Utah Code Ann. § 68-3-12.

"**Affected entity**" means a county, municipality, ~~independent~~ special service district, local district, school district, interlocal cooperation entity, specified public utility, ~~a~~ property owner, ~~a~~ property owner's association, or the Utah Department of Transportation, if:

1. The entity's services or facilities are likely to require expansion or significant modification because of an intended use of land;
2. The entity has filed with the municipality a copy of the entity's general or long-range plan; or

Commented [JJ1]: State Law - vague language

Formatted: Space Before: Auto, After: Auto, Outline numbered + Level: 1 + Numbering Style: A, B, C, … + Start at: 1 + Alignment: Left + Aligned at: 0.25" + Tab after: 0.5" + Indent at: 0.5"

Commented [JJ2]: State Law - new definitions in 2016 and assurances

3. The entity has filed with the municipality a request for notice during the same calendar year and before the municipality provides notice to an affected entity in compliance with a requirement imposed under this chapter.

"**Alley**" means a public way which is not intended for general traffic circulation and which generally affords a secondary means of vehicular access to abutting properties.
"**Appeal authority**" means the person, board, commission, agency, or other body designated by ordinance to decide an appeal of a decision on a land use application or a variance.
"**Block**" means an area of land within a subdivision entirely bounded by streets (other than alleys), freeways, railroad rights-of-way, natural barriers, or the exterior boundaries of the subdivision, or designated as a block on any recorded subdivision plat.
"**Chief executive officer**" means the Mayor.~~:~~

~~1. Mayor in municipalities operating under all forms of municipal government except the council-manager form; or~~
~~2. City manager in municipalities operating under the council-manager form of municipal government.~~

"**City engineer**" means any civil engineer duly registered in the state of Utah, appointed by the city council to accomplish the objectives of this title.

"**Collector street**" means a street, existing or proposed, of considerable continuity which serves or is intended to serve as the principal traffic way between large and separated areas or districts and which is the main means of access to the major street system.

"**Constitutional taking**" means a governmental action that results in a taking of private property so that compensation to the owner of the property is required by the:

1. Fifth or Fourteenth Amendment of the Constitution of the United States; or
2. Utah Constitution Article I, Section 22.

"**Cul-de-sac**" means a street which is designed to remain permanently closed at one end, with the closed end terminated by a vehicular turnaround.
"Culinary water authority" means the department, agency, or public entity with responsibility to review and approve the feasibility of the culinary water system and sources for the subject property.
"**Exaction**" means a condition, often in the form of impact fees, restrictive covenants or land dedication, imposed at the time of obtaining a building or other development permit used to aid the city in providing public services. Conditional requirements should comply with the standards established in Section 17.44.230 of this code.
"**General plan**" means a document that a municipality adopts that sets forth general guidelines for proposed future development of the land within the municipality.
"Land Use applicant" means a property owner, or the property owner's designee, who submits a land use application regarding the property owner's land.
"**Land use application**": (a) means an application that is required by a municipality~~'s land use ordinance~~; and submitted by a land use applicant to obtain a land use decision; and (b) does not mean an application to enact, amend, or repeal a land use regulation.
"**Land use authority**" means a person, board, commission, agency, or other body designated by the city council to act upon a land use application.
~~"**Land use ordinance**" means a planning, zoning, development, or subdivision ordinance of the city, but does not include the general plan.~~
"**Land use permit**" means a permit issued by a land use authority.

"Land Use Regulation": (a) means an ordinance, law, code, map, resolution, specification, fee, or rule that governs the use or development of land; and (b) does not include a general plan; a land use decision of the legislative body acting as the land use authority, even if the decision is expressed in a resolution or ordinance; or a temporary revision to an engineering specification that does not materially increase a land use applicant's cost of development compared to the existing specification; or impact a land use applicant's use of land.

"**Legislative body**" means the city council.

"**Lot**" means a parcel or portion of land, established for purposes of sale, lease, finance, division of interest or separate use, or separated from other lands by description on a subdivision map and/or parcel map, and having frontage upon a street.

"**Lot line adjustment**" means the relocation of the property boundary line in a subdivision between two adjoining lots with the consent of the owners of record.

"**Minor street**" means a street, existing or proposed, of limited continuity which serves or is intended to serve the needs of a local area.

"**Minor arterial street**" means a street, existing or proposed, which serves or is intended to serve as a major traffic way and is designated on the master plan as a controlled-access highway, major street, parkway or other equivalent term.

"**Minor collector street**" means a street, existing or proposed, which is supplementary to a collector street and of limited continuity which serves or is intended to serve the local needs of a neighborhood.

"**Minor**" or "**small subdivision**" means any real property, including condominiums, planned-unit developments, or re-subdivisions, improved or unimproved, divided into three or fewer lots, all having frontage on an existing dedicated street, either by establishing new lot lines or changing existing lot lines, for the purpose of sale, lease, transfer of title, division of interest, financing or separate use. The minor subdivision shall not require the dedication of any streets or public rights-of-way. Any such division made solely for street widening purposes shall not be considered a minor subdivision.

Commented [JJ3]: State Law/policy - this can be a higher number as per State Law and allow for a different, staff only, process

Commented [CB4]: Ben – leave as is – I don't like this option anyway

"**Official map**" means a map drawn by municipal authorities and recorded in a county recorder's office that:

1. Shows actual and proposed rights-of-way, centerline alignments, and setbacks for highways and other transportation facilities;
2. Provides a basis for restricting development in designated rights-of-way or between designated setbacks to allow the government authorities time to purchase or otherwise reserve the land; and
3. Has been adopted as an element of the municipality's general plan.

"**Person**" means an individual, corporation, partnership, organization, association, trust, governmental agency, or any other legal entity.

"**Planning commission**" means the West Bountiful planning commission, unless another planning commission is specifically named.

"**Planning director**" means the director of or consultant to the city planning commission, or any city official or other person appointed by the city council to accomplish the objectives of this title.

"**Plat"** means a map or other geographical representation of lands being laid out and prepared in accordance with Utah Code Ann. § 10-9a-603.

"**Preliminary design map**" or "**concept plan**" means a map to be submitted to the zoning administrator prior to the filing of a preliminary plat to show the general characteristics of the proposed subdivision.

"**Preliminary plat**" means a plat showing the design of a proposed subdivision and the existing conditions in and around the subdivision. The plat need not be based upon a detailed final survey of the property, except as provided herein. However, the plat shall be graphically accurate to a reasonable tolerance.

"**Property**" means any tract, lot, parcel or several of the same collected together for purposes of subdividing.

"**Public hearing**" means a hearing at which members of the public are provided a reasonable opportunity to comment on the subject of the hearing.

"**Public improvement**" means street work, utilities and other facilities proposed or required to be installed within the subdivision for the general use of the subdivision lot owners and for local neighborhood or community needs.

"**Public meeting**" means a meeting that is required to be open to the public under Utah Code Annotated, Title 52, Chapter 4, Open and Public Meetings Act.

"**Public works department**" means the city's public works department, acting through its authorized representatives.

"**Record of survey map**" means a map of a survey of land prepared in accordance with Utah Code Ann. § 17-23-17.

"**Sanitary sewer authority**" means the department, agency, or public entity with responsibility to review and approve the feasibility of sanitary sewer services or onsite wastewater systems.

"**Special district**" means an entity established under the authority of Utah Code Annotated, Title 17A, Special Districts, and any other governmental or quasi-governmental entity that is not a county, municipality, school district, or unit of the state.

"**Specified public utility**" means an electrical corporation, gas corporation, or telephone corporation, as those terms are defined by Utah Code Ann. § 54-2-1.

"**Standards and specifications**" means all the minimum construction standards and specifications ~~and standard detailed drawings~~ prepared by the responsible city departments and the city engineer that have been approved by ~~resolution of~~ the city council.

"**Street**" means a public right-of-way, including a highway, avenue, boulevard, parkway, road, lane, walk, alley, viaduct, subway, tunnel, bridge, public easement, or other way as located within the city.

"**Subdivider**" means any landowner or authorized person, firm, corporation, partnership or association ~~owning any tract, lot or parcel of land to be subdivided; a group of two or more persons owning any tract, lot or parcel of land to be subdivided who have given their power of attorney to one of their group or to another person to act on their behalf in planning, negotiating for, in representing or executing the purposes of the subdivision; anyone~~ who causes land to be divided into a subdivision.

"**Subdivision**" (a) means ~~:~~

~~1.~~ ~~Any~~ any land that is divided, re~~-~~subdivided or proposed to be divided into two or more lots, parcels, sites, units, plots, or other division of land for the purpose, whether immediate or future, of~~for~~ offer, sale, lease, or development either on the installment plan or upon any and all other plans, terms, and conditions.

~~a.~~ (b) Subdivision includes:

i. the division or development of land whether by deed, metes and bounds description, devise and testacy, lease, map, plat, or other recorded instrument; and

ii. ~~except as provided in subsection A.2.,~~ divisions of land for ~~all~~ residential and nonresidential uses, including land used or to be used for commercial, agricultural, and industrial purposes.

Commented [JJ5]: Policy - is this the name of a document that you will refer to?

Formatted: Highlight

Commented [CB6]: Ben – rewrite?

Commented [JJ7]: State Law - conflict with new definition - Title 17.04.03 "**Subdivider**" means any person, firm, corporation, partnership or association who causes land to be divided into a subdivision.
"**Subdivision**" means any land that is divided, re-subdivided or proposed to be divided into two or more lots, parcels, sites, units, plots or other division of land for the purpose, whether immediate or future, of offer, sale, lease or development either on an installment plan or upon any and all other plans, terms and conditions; see section 16.04.020 for more information regarding "subdivisions".

Formatted: Space Before: 0 pt, After: 7.5 pt, No bullets or numbering

Formatted: Indent: Left: 0.75", No bullets or numbering

~~b.~~ (c) Subdivision does not include:

~~i.~~iii. a bona fide division or partition of agricultural land for the purpose of joining one of the resulting separate parcels to a contiguous parcel of un-subdivided agricultural land, if neither the resulting combined parcel nor the parcel remaining from the division or partition violates an applicable ~~zoning~~ land use ordinance;

~~ii.~~iv. a recorded agreement between owners of adjoining unsubdivided properties adjusting their mutual boundary if:

1. no new lot is created; and
2. the adjustment does not result in a violation of applicable ~~zoning~~ land use ordinances; or

~~iii.~~v. a recorded document, executed by the owner of record:

1. revising the legal description of more than one contiguous parcel of property into one legal description encompassing all such parcels of property; or
2. joining a subdivided parcel ~~or~~ of property to another parcel ~~or~~ of property that has not been subdivided, if the joinder does not violate applicable land use ordinances; or

~~iv.~~vi. a recorded agreement between owners of adjoining subdivided properties adjusting their mutual boundary if:

1. no new dwelling lot or housing unit will result from the adjustment; and
2. the adjustment will not violate any applicable land use ordinance~~.~~;

vii. a bona fide division or partition of land by deed or other instrument where the land use authority expressly approves in writing the division in anticipation of further land use approvals on the parcel or parcels; or

viii. a parcel boundary adjustment.

~~2.~~ (d)

~~c.~~ The joining of a subdivided parcel of property to another parcel of property that has not been subdivided does not constitute a subdivision under this definition as to the un-subdivided parcel of property or subject the un-subdivided parcel to the municipality's subdivision ordinance. It is however subject to the subdivision plat amendment requirements

~~2. For the purpose of this chapter, a subdivision of land shall also specifically include:~~

~~a. The dedication of a street through or adjacent to a tract of land, regardless of area, which may create a division of lots or parcels constituting a subdivision;~~

~~b. Re-subdivision of land previously divided or platted into lots, sites or parcels; and~~

~~c. Condominium projects.~~

"**Subdivision design**" means the overall layout of the proposed subdivision, including, but not limited to, the arrangement of streets and intersections, the layout and size of lots, the widths and location of easements and rights-of-way for utilities, drainage structures, sewers, the nature and location of public or semi-public facilities, programs for the preservation of natural features, and the installation of public improvements.

"**Unincorporated**" means the area outside of the incorporated area of a city or town.

"**Zoning administrator**" means the ~~building inspector or other~~ person designated by the city council to enforce the regulations of this title.

"**Zoning map**" means a map, adopted as part of a land use ordinance that depicts land use zones, overlays, or districts.

Formatted: Indent: Left: 1", No bullets or numbering

Formatted: Indent: Left: 1", No bullets or numbering

Commented [JJ8]: Policy - is this accurate?

Adopted by Ord. 374-15 on 11/18/2015

16.08 Administration And Enforcement

- 16.08.010 Scope Of Compliance Required
- 16.08.020 Interpretation
- 16.08.030 Administrative Body
- 16.08.040 Violations; Penalties
- 16.08.050 Fees
- 16.08.060 File Of Recorded Subdivisions

16.08.010 Scope Of Compliance Required

A. It is unlawful for any person to subdivide any tract or parcel of land which is located wholly or in part in the city except in compliance with this title. No plat of any subdivision shall be recorded until it has been submitted and approved. A plat shall not be approved if such plat is in conflict with any provision or portion of the general plan, master ~~street~~ plan future transportation map, zoning ordinance, this title, or any other state law or city ordinance.

B. Land shall not be transferred, sold, or offered for sale, nor shall a building permit be issued for a structure until a final plat of a subdivision shall have been recorded in accordance with this title and any applicable provisions of state law, and until the improvements required in connection with the subdivision have been guaranteed as provided herein. Building permits shall not be issued without written approval of all public agencies involved. No building depending on public water, sewer, energy facilities, or fire protection shall be permitted to be occupied until such facilities are fully provided and operational.

C. All lots, plots or tracts of land located within a subdivision shall be subject to this title whether the tract is owned by the subdivider or a subsequent purchaser, transferee, devisee or contract purchaser of the land or any other person.

D. It is unlawful for any person to receive a building permit on a parcel or tract of land in a subdivision until water and sewer utilities and all underground utilities located under the street surface are installed and all streets in the subdivision are ~~rough graded~~constructed to finish grade. It shall be the responsibility of the subdivider to allow no human occupancy until all necessary utilities are installed and basic improvements are adequate to render the subdivision habitable, which improvements shall include ~~paved streets~~an all weather surface as defined by Utah State Code~~.~~ It is unlawful for any subdivider to sell any portion of an approved subdivision until the prospective buyer or builder has been advised that occupancy will not be permitted until all required improvements are completed.

Adopted by Ord. 374-15 on 11/18/2015

16.08.020 Interpretation

In their interpretation and application, the provisions of this title shall be considered as minimum requirements for the purposes set forth. When the provisions of this title impose greater restrictions than any statute, other regulation, ordinance or covenant, the provisions of this title shall prevail. When the provisions of any statute, other regulation, ordinance or covenant impose greater restrictions than the provisions of this title, the provisions of such statute, other regulation, ordinance or covenant shall prevail.

Adopted by Ord. 374-15 on 11/18/2015

16.08.030 Administrative Body

The city planning commission shall review and make recommendations to the land use authority concerning applications under this title. The city council shall be the land use authority for applications under this title.

Commented [JJ9]: State Law - It is assumed that the sub ord complies with the GP and master street plan which is referred to earlier as the "Official map". Change to official map.

Commented [JJ10]: State Law - may conflict with assurances language

Commented [CB11R10]: Ben – it's fine

Commented [JJ12]: State Law - this is now "an all weather surface"

Commented [JJ13]: State Law - The process is now wide open and subs do not have to go to the CC nor the PC. Plat approval is administrative.

Commented [CB14R13]: Ben - ??

Adopted by Ord. 374-15 on 11/18/2015

16.08.040 Violations; Penalties

It shall be a Class ~~C~~ B misdemeanor for any person to fail to comply with the provisions of this title. In addition to any criminal prosecution, the city may pursue any other legal remedy to ensure compliance with this title including, but not limited to, injunctive relief.

Adopted by Ord. 374-15 on 11/18/2015

16.08.050 Fees

A. Subdivision Application Fee. All persons desiring to develop a subdivision within the city shall file an application with the city recorder and pay a fee ~~for a permit to file~~designated the application fee ~~with the planning commission~~. This fee shall be in an amount established periodically by ~~resolution of~~ the city council. ~~Payment of the surface and subsurface drainage fees described in Section 16.32.150 shall also be made at this time. If the planning commission determines, after consultation with the city engineer, that additional or extraordinary engineering services will be required in checking the preliminary plat and/or in performing necessary field work, the planning commission may require the subdivider to pay, at the time of the submission of such application or at any time prior to final examination and review of the preliminary plat and subdivision plans, an additional fee sufficient to cover the additional engineering costs anticipated.~~

~~No subdivision plans may be considered by the planning commission until a subdivision application fee has been paid~~.

B. Plat Filing and Filing Fee. Subdividers shall file with the city recorder at the time of payment of the filing fee, ~~a certified or cashier's check made payable to "The Davis County Recorder" in~~ sufficient amount to cover the recording fees of the final plat. This payment shall be made upon presentation of the ~~preliminary~~ final plat ~~for review by the planning commission~~to be recorded. No plat shall be recorded unless the subdivider's check is sufficient to cover the cost of recording or the developer records the plat.

~~C. Review and Design Fees. Review and design fees required by the city engineer in the performance of his or her duties shall be determined in an amount necessary to cover the actual cost of checking the final plat including field work. These fees shall be approved by the city council and shall be properly receipted and deposited with the city treasurer, at the time of the submission of the final plat by the subdivider to the planning commission.~~

~~D.~~C. Public Improvement Inspection Fee. The subdivider shall remit to the city a public improvement inspection fee equal to ~~three~~ two percent (2~~3~~%) of the improvements bond total with a minimum of $1800.

~~E.~~D. Water Right Allocation Fee. For the protection of future water rights of the city and to alleviate the necessity of the perpetual conveyance of irrigation water in favor of long-term provision for drainage facilities, any water rights adequate to meet the proposed demand, surface and subsurface water rights and necessary use easements for access will, at the city's option, be transferred to the city at the time of subdivision or development. In exchange, the city will furnish culinary water to residences or other buildings used for human occupancy within the subdivision or development at the city's standard prevailing rate, not to include improvements for such connection. Such improvements will be provided by the subdivider or developer, both on and off-site. If at the time of development, the city determines that there are excess city held water rights available and the developer has not provided adequate water rights, the city, upon written application, may grant a water right allocation equal to 0.45 acre-feet per year per residential dwelling equivalent for domestic use for a fee which shall be established periodically by resolution of the city council.

Commented [JJ15]: State Law - class B now

Commented [JJ16]: State Law - give examples (too vague) of these and may want to just use the city engineer

Commented [JJ17]: you ask for the check up front but not to be deposited till PC meeting?

Commented [JJ18]: Policy - preliminary too?

Formatted: Not Highlight

Formatted: Not Highlight

~~F.~~E. Time of Fee Payment. The foregoing fees shall be paid at the following times:

1. Subdivision application fee, upon ~~presentation~~ application of the preliminary and final -plat for review by the planning commission;
2. Plat filing fees, upon presentation of the final plat for review by the city council;
3. Plan checking fee, upon presentation of the final plat for ~~review by the city council~~signature and recording;
4. Public Improvements Inspection fee, upon presentation of the final mylar plat for City signatures; and
5. Water Right Allocation fee, if applicable, upon presentation of the final mylar plat for City signatures.

Adopted by Ord. 374-15 on 11/18/2015
Amended by Ord. 382-16 on 10/3/2016

16.08.060 File Of Recorded Subdivisions

The city shall maintain a filing system of all subdivisions, which includes copies of all maps, data and official subdivision actions.

Adopted by Ord. 374-15 on 11/18/2015

16.12 Design Requirements

- 16.12.010 General Considerations
- 16.12.020 Relations To Adjoining Street System
- 16.12.030 Nonresidential Subdivisions
- 16.12.040 Street And Alley Widths, Cul-De-Sacs, Basements And Numbers
- 16.12.050 Blocks
- 16.12.060 Lots

16.12.010 General Considerations

A. The general plan shall guide the use and future development of all land within the corporate boundaries of the city. The size and design of lots, the nature of utilities, the design and improvement of streets, the type and intensity of land use, and the provisions for any facilities in any subdivision shall conform to the land uses shown and the standards established in ~~the general plan,~~ the zoning ordinance, and other applicable ordinances.

B. Trees, native land cover, natural watercourses, and topography shall be preserved when possible. ~~Subdivisions shall be so designed as to prevent excessive grading and scarring of the landscape in conformance with the zoning ordinance.~~ The design of new subdivisions shall consider, and relate to, existing street widths, alignments and names.

C. Community facilities, such as parks, recreation areas, and transportation facilities shall be provided in the subdivision in accordance with ~~general plan standards,~~ this title, and other applicable ordinances. In order to facilitate the acquisition of land areas required to implement this policy, the subdivider may be required to dedicate, grant easements over, or otherwise reserve land for schools, parks, playgrounds, public ways, utility easements, and other public purposes.

Adopted by Ord. 374-15 on 11/18/2015

16.12.020 Relations To Adjoining Street System

Commented [JJ19]: State Law - this should be upon making application and part of your fee schedule. Fees should be paid at the time of application, in general.

Commented [JJ20]: State Law - It is ok to have two fees - one for prelim and one for final, but would suggest when each application is submitted

Commented [CB21]: Confirmed with County Recorder – they require Mylar

Formatted: Highlight

Formatted: Highlight

Commented [JJ22]: State Law - Also need to add a determination of completeness by staff

Commented [CB23R22]: Ben – I don't think so

Commented [JJ24]: State Law - Since this is an administrative ordinance, the ordinance implements the General Plan. Whatever is in the GP should be in here or the applicable zone the sub falls under

Commented [JJ25]: State Law - this has to be ordinance standards

Commented [JJ26]: State Law - Probably need a separate ordinance for this or a better list - too general

Commented [CB27R26]: Ben - ?? Maybe

Commented [JJ28]: Editing - Relationship?

A. Streets in proposed subdivisions shall be arranged so as to continue existing streets in adjoining areas or so as to properly protect those streets when adjoining lands are not subdivided. All such streets shall be planned and built at the same or greater width, unless the city grants a variance to this requirement. Such street arrangements shall be made so as not to cause unnecessary hardship to owners of adjoining property when they seek to provide for access to those lands.

B. ~~When, in the opinion of the planning commission, it is desirable to provide for street access to adjoining property, p~~Proposed streets shall be extended by dedication and/or fully improved as the city council may determine, to the boundary of such property. Half streets along the boundary of land proposed for subdivision will not be permitted. Minor streets shall approach the major or collector streets at an angle of not less than eighty (80) degrees.

Adopted by Ord. 374-15 on 11/18/2015

16.12.030 Nonresidential Subdivisions

A. The street and lot layout of a nonresidential subdivision shall be appropriate to the land for which the subdivision is proposed, and shall conform to the proposed land use and standards established in the city's future transportation plan ~~master plan, any planned community plans,~~ and ~~the~~ zoning ordinances ~~of the city~~.

B. Nonresidential subdivisions shall include industrial and/or commercial tracts.

C. In addition to the principles and standards in this title which are appropriate to the planning of all subdivisions, the subdivider shall demonstrate to the satisfaction of the planning commission that the street, parcel and block pattern proposed is specifically adapted to the uses anticipated and takes into account other uses in the vicinity. The following principles and standards shall be observed before allowing such subdivisions:

1. Proposed industrial parcels shall be suitable in area and dimensions to the types of industrial development anticipated;
2. Street rights-of-way and pavements shall be designed ~~adequate~~ to accommodate the anticipated type and volume of traffic to be generated;
3. ~~Special requirements may be imposed by the city with respect to street, curb, gutter and sidewalk design and construction;~~
4. ~~3. Special requirements may be imposed by the city with respect to the installation of public utilities, including water, sewer and storm water drainage~~;
5. ~~4. Every e~~Effort shall be made to protect adjacent residential areas from potential nuisance from the proposed nonresidential subdivision, including the provision of extra depth in parcels backing up on existing or potential residential development and provisions for a permanently landscaped buffer strip or other suitable screening such as berms or walls as required by the planning commission;
6. ~~5.~~ Streets carrying nonresidential traffic, especially truck traffic, shall ~~not normally be extended to the boundaries of adjacent existing or potential residential areas, or connected to streets intended for predominantly residential traffic~~be connected to city collector or arterial streets; and
7. ~~6.~~ Subdivisions for proposed commercial development shall take into account and specifically designate all areas for vehicular circulation and parking, for pedestrian circulation, and for buffer strips and other landscaping.

Adopted by Ord. 374-15 on 11/18/2015

16.12.040 Street And Alley Widths, Cul-De-Sacs, Basements And Numbers

Commented [JJ29]: State Law/Policy - Are you wanting this to go to the Appeal Authority?

Commented [JJ30]: State Law - opinions are not clearly standards based - drop and add criteria

Commented [JJ31]: Policy - If that remains part of your process

Commented [JJ32]: State Law - not sure what this is. If this is the GP then drop. All your standards have to be in the ordinances or a separate doc that is adopted and formally named/referenced

Commented [JJ33]: State Law - Vague - zone should reflect the lot size requirements

Commented [JJ34]: State Law - again

A. The minimum width of proposed streets, measured from lot line to lot line, shall be as shown on the ~~master plan~~future transportation map, or if not shown~~ on such plan~~, shall be:
   1. Minor arterial streets, not less than eighty (80) feet;
   2. Major collector streets, not less than sixty-six (66) feet;
   3. Minor collector streets, not less than sixty (60) feet;
   4. Local service streets or minor streets, not less than fifty (50) feet; and
   5. Alleys, ~~if~~ are not permitted~~, not less than twenty (20) feet~~.

~~B. Alleys may be required in the rear of business lots, but will not be allowed in residential blocks except under unusual conditions when such alleys are considered necessary by the planning commission.~~

~~C.~~B. Minor terminal streets (cul-de-sacs) shall not be longer than four hundred (400) feet~~, to the beginning of the turnaround~~. The length of a cul-de-sac shall be measured from the centerline of the intersecting street along the centerline of the cul-de-sac, to a point at the center of the cul-de-sac. Each cul-de-sac must be terminated by a turnaround of not less than one hundred (100) feet diameter. If surface water drainage is into the turnaround, due to the grade of the street, necessary catch basins and drainage easements shall be provided.

~~D.~~C. The planning commission may require that easements for drainage through adjoining property be provided by the subdivider, and easements of not less than ten (10) feet in width for water, sewer, drainage, power lines and other utilities shall be provided in the subdivision unless otherwise required by the planning commission.

~~E.~~D. Proposed streets which are obviously in alignment with other already existing streets shall bear the number of the existing street.

Adopted by Ord. 374-15 on 11/18/2015

16.12.050 Blocks

The maximum length of blocks generally shall be one thousand two hundred (1,200) feet and the minimum length of blocks shall be five hundred (500) feet. In blocks over eight hundred (800) feet in length ~~there may be required~~ a dedicated walkway through the block at approximately the center of the block is required if the connection will connect to another right of way public or quasi-public property. The easement for ~~S~~such a walkway shall be not less than ten (10) feet in width. The width of blocks generally shall be sufficient to allow two tiers of lots. Blocks intended for business or industrial use shall be designated specifically for such purposes with adequate space set aside for off-street parking and delivery facilities.

Adopted by Ord. 374-15 on 11/18/2015

16.12.060 Lots

A. The lot arrangement, design and shape will be such that lots will provide satisfactory and desirable sites for buildings, be properly related to topography, and conform to requirements set forth herein.

~~Lots shall not contain~~The area within a lot that is peculiarly shaped ~~elongations~~ which would be unusable for normal purposes and is solely to provide necessary square footage will not be counted when it applies to the minimum lot width or area requirement.~~.~~

B. All lots shown on the subdivision plat must conform to the minimum requirements of the zoning ordinance then in effect~~, if any,~~ for the zone in which the subdivision is located, and to the minimum requirements of the county health department for water supply and sewage disposal. The minimum width for any residential building lot shall be as required by the zoning ordinance then in effect for zoned areas.

C. Each lot shall abut on a street dedicated for public use by the subdivision plat or an existing public street which is more than twenty-six (26) feet wide, except that when such existing street right of

Commented [JJ35]: Policy - may also want to refer to a separate doc of cross sections

Formatted: Highlight

Commented [CB36]: Need to make more clear

Formatted: Highlight

way is less than fifty (50) feet wide or less than the width requirement of the master plan future transportation map~~street plan~~, additional land shall be dedicated to widen the street for that portion of the street upon which the subdivision has frontage. The amount of land to be dedicated shall be ~~determined by the planning commission~~ as necessary ~~and reasonable~~ to satisfy the ~~requirements of one-half of that~~ required width ~~or fifty (50) feet, whichever is greater~~ along the road alignment.

D. Flag lots will only be allowed where traditional lot development is not feasible. Such lots shall meet the following criteria:
   1. The staff of the lot shall not be less than twenty feet (20') and shall not exceed the design length requirements for a cul-de-sac.
   2. The staff of the lot shall serve one lot only and shall have direct access to a dedicated and improved public street.
   3. The staff of the lot shall be owned, fee simple, as part of the lot.
   4. The staff of the lot shall approach the public street at an angle of not less than eighty degrees (80°).
   5. The staff of the Flag lot cannot extend from intersections, street corners, cul-de-sacs, or dead end streets.
   6. The body of the lot shall meet the lot size and dimensional requirements of the applicable zone. The staff area shall not be used in computing lot size. Proposed buildings shall comply with the minimum setbacks required for the zone. Determinations as to which are the front, side, and rear setbacks shall be made at the time of the subdivision application and shall be designated on the plat.
   7. Flag lot must comply with fire code requirements including access width, driving surface, parking and fire hydrant placement.
   8. Flag lots cannot be used where traditional methods of development could occur.
   9. Subdivisions which contain more than four (4) lots cannot contain a flag lot.
   10. The lot shall be graded so storm water runoff does not negatively impact neighboring properties.
   11. All flag lots shall have the street address displayed on private property in a prominent location where the staff abuts the public street.
   12. A flag lot may not be created which would negatively impact the future continuation of existing stub streets.
   13. Other requirements imposed by the Conditional Use Permit to mitigate the potential negative impacts caused by the proposed use; the Conditional Use Permit and plat review cannot waive requirements 1 through 12 of this Section.

E. Interior lots having frontage on two streets shall be prohibited except when exceptional circumstances, as determined by the planning commission, would make such lots functionally acceptable. In all instances when such lots are permitted, the subdivider shall record deed restrictions in perpetuity for those lots, limiting access from those lots to one street only so that all lots have access to the same street. Such deed restrictions shall also prohibit construction (except for fencing as allowed under Title 17) within that space adjacent to the street, from which access is prohibited, to a depth of thirty (30) feet.

F. Corner lots shall have extra width sufficient to account for larger setbacks.

G. Side lines of lots shall be approximately at right angles, or radial to the street line.

H. All remnants of lots below ~~minimum size~~ two-thousand (2000) square feet left over after the subdivision of a large tract must be added to adjacent lots rather than allowed to remain as unusable parcels.

I. When the land covered by a subdivision includes two or more parcels in separate ownership and the lot arrangement is such that a property ownership line divides one or more lots, the land in each lot so divided shall be transferred by deed to single ownership before approval of the final plat. Such transfer shall be certified to the planning commission by the city recorder.

Commented [JJ37]: State Law - again, I think this is the Official Map

Commented [JJ38]: Policy - maybe city engineer would be better

Commented [JJ39]: State Law/Policy - need a definition

Commented [CB40R39]: Ben – Title 17

Commented [JJ41]: Policy - many ordinances ask for slightly larger lot size (excluding the stem). Plus different setback standards.

Commented [CB42]: Ben – can make larger setbacks

Commented [JJ43]: Policy - so, a sub plus a CUP? Already have a lot of requirements - what is the purpose of the CUP? Do all the zones clearly allow flag lots?

Commented [CB44R43]: Ben - Should consider permitted uses

Commented [JJ45]: Policy - does this include sheds and garages?

Commented [CB46R45]: Ben - yes

Commented [JJ47]: Policy - as specified in the applicable zoning chapter

Commented [CB48R47]: Ben – 95'?

Formatted: Highlight

Adopted by Ord. 374-15 on 11/18/2015

16.16 Maps Or Plans

- 16.16.010 Preliminary Conference And Concept Plan
- 16.16.020 Preliminary Plat
- 16.16.030 Final Plat
- 16.16.040 Vacating Or Changing A Recorded Subdivision Plat

16.16.010 Preliminary Conference And Concept Plan

A. Purpose. The purpose of the preliminary conference and concept plan is to provide the subdivider with an opportunity, before filing a preliminary plat, to consult with and receive assistance from the city regarding the regulations and design requirements applicable to his or her proposed subdivision.

B. Prior to filing a preliminary subdivision plat, each person who proposes to subdivide land in the city shall meet with and submit to the zoning administrator three copies of a preliminary design map or concept plan of the proposed subdivision which shall contain such information as is necessary to properly locate the subdivision.

The plan shall include the following information:

1. The proposed name of the subdivision;
2. A vicinity plan showing significant natural and manmade features on the site and within five hundred (500) feet of any portion of it; the property boundaries of the proposed subdivision; the names of adjacent property owners; topographic contours at no greater interval than five feet; and north arrow;
3. Proposed lot and street layouts, showing the number, size and design of each lot and the location and width of each street;
4. Locations of any important reservations or easements;
5. The general nature and extent of grading;
6. Descriptions of the type of culinary and irrigation water systems proposed as well as documentation of water rights and secondary water shares;
7. A description of the size and location of sanitary sewer and storm water drain lines and subsurface drainage;
8. A ~~description~~ map of those portions of the property which are included in the most recent flood insurance rate maps prepared by FEMA;
9. The total acreage of the entire tract proposed for subdivision;
10. The ownership of all lands within the proposed subdivision;
11. The mailing address of each owner of land within the subdivision as well as of those lands contiguous with the subdivision; and
12. Proposed changes to existing zoning district boundaries or zoning classifications, if any, and/or the necessity of obtaining conditional use permits.

C. The zoning administrator shall return such plan or map to the subdivider with suggestions within twenty (20) days of receipt. ~~Subdivision information forms shall be furnished to the subdivider at the time of returning the concept plan and map, which form shall be filled out by the subdivider and returned to the planning commission at the time the preliminary plat is submitted.~~

D. A conceptual site plan is not intended to permit actual development of property pursuant to such plan but shall be prepared merely to represent how the property could be developed. Submittal, review ~~, and approval~~ of an application for a conceptual site plan shall not create any vested rights to development.

Commented [JJ49]: Policy - maybe at this point this is ok but you probably need 1 or 2' contours. this changes to the 1 foot later on

Commented [JJ50]: Policy - maybe a mapped area instead?

Formatted: Not Highlight

Commented [JJ51]: Policy - should be staff, prior to the preliminary plat being scheduled for a hearing/meeting

Commented [JJ52]: State Law/policy - maybe not an "approval" more of a staff comments. Vesting is at the time they submit a complete application

Adopted by Ord. 374-15 on 11/18/2015

16.16.020 Preliminary Plat

A. Purpose. The purpose of the preliminary plat is to require formal preliminary approval of a subdivision in order to minimize changes and revisions which might otherwise be necessary on the final plat.

B. Each person who proposes to subdivide land in the city shall prepare a preliminary plat of such proposed subdivision and shall submit to the planning commission, ~~three (3) black line prints to the planning commission~~, two (2) full size copies, ~~and~~ one (1) 11x17 inch copy, and one (1) electronic copy. It shall be the responsibility of the planning commission to determine whether the proposed subdivision complies with all regulations and requirements imposed by this title and the zoning ordinance.

C. Preliminary Plat Preparation and Required Information. The preliminary plat shall be drawn to a scale not smaller than one hundred (100) feet to the inch and shall include the following information:

1. The proposed name of the subdivision;
2. The location of the subdivision as it forms part of a larger tract or parcel, including a sketch of the future street system of the unplatted portion of the property;
3. A vicinity map of the proposed subdivision, drawn at a scale of five hundred (500) feet to the inch, showing all lots and streets in the project, and all abutting streets, with names of the streets;
4. The names, ~~and~~ addresses, phone numbers, and e-mails of the subdivider~~,~~; the engineer or surveyor of the subdivision; and the owners of the land immediately adjoining the land to be subdivided;
5. A contour map drawn at intervals of at least one foot, showing all topographic features with verification by a qualified engineer or land surveyor;
6. Certification of the accuracy of the preliminary plat of the subdivision and any traverse to permanent survey monuments by a land surveyor, registered to practice in the state of Utah;
7. The boundary lines of the tract to be subdivided, with all dimensions shown;
8. Existing sanitary sewers, storm drains, subdrains, culinary and secondary water supply mains and culverts and other utilities within the tract or within one hundred (100) feet;
9. The location, widths and other dimensions of proposed streets, alleys, easements, parks and other open spaces and lots showing the size of each lot in square footage and properly labeling spaces to be dedicated to the public;
10. The location, principal dimension, and names of all existing or recorded streets, alleys and easements, both within the proposed subdivision and within one hundred (100) feet of the boundary, showing whether recorded or claimed by usage; the location and dimensions to the nearest existing bench mark or monument, and section line; the location and principal dimensions of all water courses, public utilities, and other important features and existing structures within the land adjacent to the tract to be subdivided, including railroads, power lines, and exceptional topography;
11. The existing use or uses of the property and the outline of any existing buildings and their locations in relation to existing or proposed street and lot lines drawn to scale;
12. The location of existing bridges, culverts, surface or subsurface drainage ways, utilities, buildings or other structures, pumping stations, or appurtenances, within the subdivision or within two hundred (200) feet, and all known wells or springs as well as the location of any one hundred (100) year flood plains as determined by the Federal Emergency Management Agency (FEMA);
13. Proposed off-site and on-site culinary and secondary water facilities, sanitary sewers, storm drainage facilities, and fire hydrants;

Commented [JJ53]: State Law - Processing options abound - could go to PC only for prelims and council for finals - no need for four step process. No need for hearings either

Commented [JJ54]: Policy - any e type copies?

Commented [JJ55]: State Law - should be based on a staff determination of completeness (engineer and planner)

Commented [JJ56]: Policy - add e mails and phone numbers

Commented [JJ57]: Policy - good!

Commented [JJ58]: Policy - probably need sizes and capacities?

14. Boundary lines of adjacent tracts of unsubdivided land within one hundred (100) feet of the tract proposed for subdivision, showing ownership and property monuments;
15. Verification as to the accuracy of the plat by the owner.

Each sheet of the set shall also contain the name of the project, scale (not less than one hundred (100) feet to the inch, except for the vicinity map), sheet number, and north arrow.

D. In addition to the foregoing plat, the subdivider shall provide the following documents:
1. A storm water plan in accordance with 16.28.060 Hydrology Report;~~.~~
2. A plan for providing street lighting in the subdivision in compliance with the city's design standards which includes LED fixtures at approximately three hundred fifty foot (350') spacing. Street lights should be located at intersections, group mailboxes, and other prominent features;
3. Copies of any agreements with adjacent property owners relevant to the proposed subdivision;
4. A comprehensive geotechnical and soils report prepared by a qualified engineer based upon adequate test borings or excavations in accordance with the city's design standards which includes ground water levels, bearing capacities and pavement design recommendations;
5. A copy of a preliminary title report evidencing satisfactory proof of ownership;
6. Satisfactory evidence that all utilities and services will be available for the subdivision and that the utilities and easements have been reviewed by the utility companies;
7. A Davis County development and construction permit, if the proposed project is located within one hundred (100) feet of a critical flood area as defined by Davis County;
8. Copies of proposed protective covenants in all cases when subsurface drains are to be located within the subdivision;
~~8.~~9. Locate group mailboxes off arterial or collector streets and a minimum of one hundred feet (100') from intersections, whenever possible;
~~9.~~10. When the subdivider is not an individual corporation or registered partnership, a notarized statement bearing the signatures of all owners of record of the property to be subdivided which designates a single individual who shall act for and on behalf of the group in all appearances before public bodies, agencies or representatives necessary to execute the purpose of subdividing the property;~~ and~~
~~10.~~11. When a subdivision contains lands which are reserved in private ownership for community use, including common areas, the subdivider shall submit with the preliminary plat a preliminary copy of the proposed articles of incorporation, homeowner's agreements and bylaws of the owner(s) or organization empowered to own, maintain and pay taxes on such lands and common areas.
~~11.~~12. The subdivider shall also comply with all other applicable federal, state and local laws and regulations and shall provide evidence of such compliance if requested by the city.

E. Preliminary Plat Review and Approval by the Planning Commission. Upon receipt of the preliminary plat, the city will distribute copies of the plat to the city engineer and such other governmental departments and agencies for review and comment as appropriate. Within thirty (30) days after the filing of a preliminary plat of a subdivision and any other information required, the planning commission will consider the preliminary plat, or grant approval on conditions stated.

Approval of the preliminary plat by the planning commission shall not constitute final acceptance of the subdivision by the planning commission. The city shall notify the subdivider of the action taken by the planning commission~~ and provide one copy of the preliminary plat and one copy of the planning commission's report signed by the chair of the planning commission. Receipt of this signed copy shall, i~~If the preliminary plat has been approved, ~~be authorization for~~ the subdivider ~~to~~ may proceed with the preparation of plans and specifications for the minimum improvements

Commented [JJ59]: Policy - is this different than FEMA maps previously mentioned?

Commented [JJ60]: Policy - This may be how you do this but is more commonly a staff responsibility

required in this title and with the preparation of the final plat. ~~One copy of the approved preliminary plat shall be retained by the city.~~ If the preliminary plat is not approved, the city~~planning commission~~ will specify in writing any inadequacy in the application including noncompliance with city regulations, questionable or undesirable design and/or engineering, or the need for any additional information.

F. Waiver for Minor or Small Subdivisions. Provided the conditions listed in Utah Code Ann. § 10-9a-605, as amended, are met and the planning commission has recommended for approval the record of survey map, a subdivider may present his or her survey map directly to the city council for final approval of said subdivision. If the survey map meets with the council's approval, the requirement of preparing a final plat for the subdivision may be waived. Upon this waiver, the subdivider may sell land by metes and bounds, without the necessity of recording a plat. In the development of the subdivision, however, the subdivider must provide such public infrastructure improvements and easements as required by the city and must comply with all of the requirements and specifications set forth by the planning commission and city council as the basis for granting subdivision approval.

Following approval by the city council and receipt of all necessary approvals and signatures, city council must submit a certificate of written approval along with the metes and bounds description for the subdivision, as outlined in Utah Code Ann. § 10-9a-605, if a plat is not recorded for such subdivision.

Adopted by Ord. 374-15 on 11/18/2015
Amended by Ord. 382-16 on 10/3/2016

16.16.030 Final Plat

A. Purpose. The purpose of the final plat is to require formal approval by the planning commission and city council before a subdivision plat is recorded in the office of the Davis County recorder. The final plat and all information and procedures relating to it shall in all respects be in compliance with the provisions of this section. The final plat and construction plans shall conform in all respects to those regulations and requirements specified during the preliminary plat procedure.

B. Filing Deadline, Application and Fees. A complete application for final plat approval shall be made within twelve (12) months after approval or ~~conditional~~ approval with conditions of the preliminary plat by the planning commission. This time period may be extended one time for up to six (6) months for good cause shown if subdivider petitions the planning commission for an extension prior to the original twelve (12) month approval expiration date. The subdivider shall file an application for final plat approval with the city on a form prescribed by the city, together with three copies of the proposed final plat and three copies of the construction drawings and an electronic copy of the construction drawings. At the same time, the subdivider shall pay to the city an application fee as set periodically by the city council.

C. Preparation and Required Information. The following provisions set forth the manner in which a final plat must be prepared and the information it must contain.

1. The final plat shall consist of a sheet of approved mylar or comparable material at a size consistent with the recording requirements of the Davis County Recorder's Office. ~~with the outside or trim line dimensions of nineteen (19) inches by thirty (30) inches.~~ The border line of the plat shall be drawn in heavy lines leaving a space of at least one and one-half inches on the left side and at least one-half inch margin on the other sides. The plat shall be drawn so that the top of the drawing faces either north or west, whichever accommodates the drawing best. All lines, dimensions and markings shall be made with approved

Commented [JJ61]: State Law - might want to say continued (administrative decision - "shall be approved") and again maybe a staff function to provide in writing up the plat deficiencies

Commented [JJ62]: State Law/policy - good to repeat to 3 or less lots. Again can do this as staff approval

Commented [JJ63]: State Law - could just be CC

Commented [JJ64]: State Law - vague - what is a conditional approval?

Commented [JJ65]: Policy - probably want electronic submission too

Commented [JJ66]: Policy - electronic?

waterproof black ink. The plat shall be made to a scale large enough to clearly show all details, and in any case not smaller than one hundred (100) feet to the inch, and workmanship on the finished drawing shall be neat, clean cut and readable.

2. The plat shall show the subdivision name and the general location of the subdivision in bold letters at the top of the sheet.
3. The plat shall contain a north arrow and scale of the drawing and the date.
4. The plat shall be signed by all required and authorized parties with appropriate notarial acknowledgements.
5. An accurate and complete survey to second order accuracy shall be made of the land to be subdivided. A traverse of the exterior boundaries of the tract, and of each block, when computed from field measurements on the ground shall close within a tolerance of one foot to twenty thousand (20,000) feet.
6. The plat shall show accurately drawn boundaries and shall note the proper bearings and dimensions of all boundary lines of the subdivision. These lines shall be properly tied to public survey monuments and should be slightly heavier than street and lot lines.
7. The plat shall show all survey and mathematical information and data necessary to locate all monuments and to locate and retrace all interior and exterior boundary lines appearing thereon, including bearing and distance of straight lines, and central angle, radius and arc length of curves. The plat shall also contain such information as may be necessary to determine the location of beginning and ending points of curves. All property corners and monuments within the subdivision shall show the calculated Davis County coordinates. Lot and boundary closure shall be calculated to the nearest one-hundredth of a foot.
8. All lots, blocks and parcels offered for dedication for any purpose shall be delineated and designated with dimensions, boundaries and courses clearly shown and defined. The square footage of each lot shall also be shown. Parcels offered for dedication other than for streets or easements shall be clearly designated on the plat. Sufficient linear, angular and curved data shall be shown so as to be able to readily determine the bearing and length of the boundary lines of every block, lot and parcel. No ditto marks shall be used for lot dimensions.
9. The plat shall show the right-of-way lines of each street, and the width of any portion being dedicated as well as the widths of any existing dedications. The widths and locations of adjacent streets and other public properties within fifty (50) feet of the subdivision shall be shown with dotted lines. If any street in the subdivision is a continuation or an approximate continuation of an existing street, the conformity or the amount of nonconformity of such existing streets shall be accurately shown.
10. All lots and blocks are to be numbered consecutively under a definite system approved by the planning commission. Numbering shall continue consecutively throughout the subdivision with no omissions or duplications.
11. All streets, including named streets, within the subdivision shall be numbered in accordance with and in conformity with the adopted street numbering system adopted by the city. Each lot shall show the assigned street addresses, and shall be according to the standard addressing methods approved by the city. In the case of corner lots, an address will be assigned for each part of the lot having street frontage.
12. The side lines of all easements shall be shown by fine dashed lines. The plat shall also show the width of all easements and ties thereto sufficient to definitely locate the same with respect to the subdivision. All easements shall be clearly labeled and identified.
13. The plat shall fully and clearly show all stakes, monuments and other evidence indicating the boundaries of the subdivision as found on the site. Any monument or benchmark that is disturbed or destroyed before acceptance of all improvements shall be replaced by the subdivider under the direction of the city engineer. The following required monuments shall be shown on the final plat:

a. The location of all monuments placed in making the survey, including a statement as to what, if any, points were reset by ties; and
b. All right-of-way monuments at angle points and intersections as approved by the city engineer.

14. The final plat shall contain the name of the surveyor, together with the date of the survey, the scale of the map and notations as to the number of sheets comprising the plat. The following certificates, acknowledgements and descriptions shall appear on the title sheet of the final plat and may be combined when appropriate:
    a. A registered land surveyor's certificate of survey;
    b. An owner's dedication certificate;
    c. A notary public's acknowledgement for each signature on the plat;
    d. That all new subdivision plats submitted for approval in West Bountiful City, tie by metes and bounds description in both the written boundary description and the graphic (drawn) portion of the plat to a section or one-quarter section monument of the Salt Lake Base and Meridian;
    e. Signature blocks for the planning commission, city engineer, city attorney and city council (which shall consist of a signature line for the mayor and an attestation by the city recorder). A block for the Davis County recorder shall be provided in the lower right corner of the final plat; and
    f. Such other affidavits, certificates, acknowledgements, endorsements and notarial seals as are required by law, by this title, or by the city attorney.
15. Before recording of the plat, the subdivider shall submit a current title report to be reviewed by the city attorney. A "current title report" is considered to be one which correctly discloses all recorded matters of title regarding the property and which is prepared and dated not more than thirty (30) days before the proposed recordation of the final plat.
16. The owner's dedication certificate, registered land surveyor's certificate of survey, and any other certificates contained on the final plat shall be in the form prescribed by the city's subdivision standards and specifications, a copy of which shall be available for reference at the city offices.
17. When a subdivision contains lands which are reserved in private ownership for community use, including common areas, the subdivider shall submit with the final plat a final copy of the proposed articles of incorporation, homeowner's agreements and bylaws of the owner(s) or organization empowered to own, maintain and pay taxes on such lands and common areas.

D. Construction Plans; Preparation and Required Information. The subdivider shall prepare and submit construction plans in accordance with the requirements and standards set forth under public improvements in this title.

E. E. Review by the City Engineer. The city engineer and zoning administrator will review the final plat and construction plans and determine compliance with the engineering and surveying standards and criteria set forth in this ordinance and all other applicable ordinances of the city and the state of Utah. The public works department will be allowed the right to review the final plat and construction plans to check for accuracy and appropriate connectivity to current city infrastructure. The public works department shall provide written comments to the city engineer and subdivider when deemed necessary and appropriate. The city engineer will complete review of the plat within thirty (30) days after the plat is submitted for review to the engineer. If the final plat complies with the improvement standards and all necessary requirements of this title, the city engineer will sign the plat in the appropriate signature block and forward it to the planning commission. The engineer will not sign the plat unless the survey descripton is correct and all easements are correctly described and located. If the final plat or the construction plans do not comply with all necessary requirements, the city engineer shall return the plans and plat to the subdivider with comment.

Commented [JJ67]: State Law - or CC depending on process chosen. Also may want to consider a complete application requirement

F. Planning Commission Action. Upon receipt of the comments by the city engineer and zoning administrator, the planning commission shall review the plat to determine whether it conforms with the preliminary plat, with all changes requested, and with all requirements imposed as conditions of acceptance. ~~As part of the planning commission's review, the zoning administrator will check the final plat for completeness and compliance with the requirements of this title.~~ If the submitted plat is not acceptable, the planning commission shall notify the subdivider and specify the respects in which it is deficient. If the planning commission determines that the final plat is in conformity with all requirements and the ordinances of the city, it shall recommend the approval of the plat.

G. Review by the City Attorney. The city attorney shall review the final plat, the signed subdivision improvements agreement, the current title report and the security for insuring completion of the improvements to verify compliance with the city's dedication and bonding requirements. The city attorney may also review public easements, protective covenants and other documents when applicable. Upon approval of the items specified in this section, the city attorney will sign the plat in the appropriate signature block.

H. Review by the City Council. Within a reasonable time following the approval of the final plat by the planning commission, the final plat shall be submitted to the city council for its review and consideration. The city council shall not be bound by the recommendations of the city staff or the planning commission and may set its own conditions and requirements consistent with this title. The city council ~~may~~ will approve the final plat if it determines that the plat is in conformity with the requirements of this title, other applicable ordinances, and any reasonable conditions either recommended by the city's staff and/or planning commission or initiated by the city council; that all fees have been paid as required; and the council is satisfied with the plat as presented. If the city council determines that the final plat is not in conformity with this title or other applicable ordinances, or any reasonable conditions imposed, it may disapprove the final plat. The council shall specify the reasons for ~~such disapproval~~not approving in writing to the subdivider.

I. Amended Plat. Within one year after the city council has ~~dis~~approved any plat, the subdivider may file with the planning commission a plat altered to meet the requirements of the city council. Upon approval and recommendation of the planning commission, this ~~amended~~ revised plat shall be submitted to the city council for final approval.

J. Approval. No final plat shall have any force or effect unless the same has been approved by the city council and has been signed by the mayor and city recorder and recorded in the Davis County Recorder's office.

K. Security for Public Improvements.

1. Prior to a final plat's approval by the city council and its recordation with the county recorder, the subdivider shall enter into a bond agreement acceptable to the city as security to insure completion of all improvements required in the subdivision. The bond agreement shall be in a form approved by the city council and may contain specific provisions approved by the city attorney. The agreement shall include but not be limited to the following requirements:
    a. The subdivider agrees to complete all improvements within a period of time not to exceed eighteen (18) months from the date the agreement is executed.
    b. The improvements will be completed to the satisfaction of the city and in accordance with the city's subdivision standards and specifications (as established by the city engineer and adopted by the city council).
    c. The improvements bond will be equal to one hundred ~~twenty~~ (~~12~~100) percent of the city engineer's estimated cost of the improvements, including landscaping costs.
    d. The city shall have immediate access to the bond proceeds.
    e. The bond proceeds may be reduced at intervals determined by the city upon the request of the subdivider as improvements are installed. The amount of all such reductions shall be determined by the city. Such requests may be made only once

Commented [JJ68]: State Law - optional

Commented [JJ69]: State Law - is the ZA designated as the land use authority?

Commented [JJ70]: State Law - they are bound by the ordinance standards, however!

Commented [JJ71]: State Law - have to found in this Title

Commented [JJ72]: State Law - terminate processing until they meet City standards

Commented [JJ73]: State Law - termination not denial

Commented [JJ74]: State Law - terminated processing

Commented [JJ75]: Policy - might want to add language about phasing - some projects will go longer than 18 months if phasing is involved.

Commented [JJ76]: State Law - now can only be 100% and only for the public improvements

every thirty (30) days and no reduction shall be authorized until such time as the city has inspected the improvements and found them to be in compliance with the city's standards and specifications. All reductions shall be by written authorization of the city engineer and no bond shall be reduced below ten (10) percent of its face value plus the estimated cost of ~~slurry seal~~asphalt seal coat either before or after city's final acceptance. ~~After the two-year warranty period, the remaining proceeds plus interest shall be refunded to the subdivider. The amount of this interest will be calculated at a rate equal to that received on the city's other investments in the State Treasurer's Fund and shall be paid on the declining balance of the bond.~~

f. If the bond proceeds are inadequate to pay the cost of completing the improvements according to the city's standards and specifications for whatever reason, including previous reductions, the subdivider shall be responsible for the deficiency and no further building permits shall be issued in the subdivision until the improvements are completed; or, with city council approval, a new satisfactory bond has been executed and delivered to the city; or other satisfactory arrangements have been made to insure completion of the remaining improvements.

g. The city's costs of administration and cost of obtaining the bond proceeds, including attorney's fees and court costs, shall be deducted from any bond proceeds.

h. Upon receipt of the bond proceeds, after expiration of the time period for completion of the improvements, the cost of completion shall include reimbursement to the city for the costs of administration to complete the improvements.

i. The subdivider agrees to hold the city harmless from any and all liability which may arise as a result of the improvements which are installed until such time as the city certifies the improvements are complete and accepts the improvements at the end of the ~~two~~one-year warranty period.

2. The improvements bond agreement shall be one of the following forms as prescribed by the City:

a. A cash bond agreement accompanied by a cashier's check payable only to the City; or

b. An escrow agreement and account with a federally insured bank for one hundred ~~ten~~ percent (~~11~~100%) of the city engineer's estimated cost of the improvements~~, together with a ten (10) percent cash bond agreement held only by the City~~.

~~b.~~3. A warranty bond equal to ten (10) percent of the improvements bond shall be held as a cash bond by the city. After the one-year warranty period, the remaining proceeds plus interest shall be refunded to the subdivider. The amount of this interest will be calculated at a rate equal to that received on the city's other investments in the State Treasurer's Fund and shall be paid on the declining balance of the bond.

L. Payment of Fees. All required and unpaid fees shall be paid by the subdivider to the city by cashier's check prior to ~~approval of the final plat by the city council~~ the mayor signing the final plat for recording.

M. Recording of Final Plat. After filing the bond agreements described above, payment of all required fees~~,~~ and signing of the plat by the mayor, ~~and~~ city recorder, and city attorney, the final plat shall be presented ~~by the city recorder~~ to the Davis County recorder for recordation. ~~The city recorder shall deliver forthwith the recorder's receipt and any change due to the subdivider.~~

N. Warranty Period. The warranty period referred to above shall commence upon receipt of complete and accurate recording drawings, and upon the date that all improvements required by the city to be installed within the subdivision have been completed to the satisfaction of the city and a final

Commented [JJ77]: Policy - is this part of your standard procedure to slurry seal after road installation?

Commented [JJ78]: State Law - might want to have a fee to prepare and administer the bond but not sure you can just pull that from the bond when problems occur

Commented [CB79R78]: Ben – ? g & h are not much different

Commented [JJ80]: State Law - 100% only

Commented [CB81R80]: Ben – where?

Formatted

Formatted: Not Highlight

on-site review thereof has been made approving the same. The warranty period shall commence at that date and shall continue for a period of ~~two~~ one year~~s~~ thereafter. If any deficiencies are found by the city during the warranty period in materials or workmanship, the subdivider shall promptly resolve such defects or deficiencies and request the city engineer to review once more the improvements. At the end of the ~~two~~one-year warranty period the subdivider shall request the city engineer to make a final warranty period on-site review of all improvements. If the city engineer verifies that the improvements are acceptable, the city engineer shall notify the city administrator who shall refer the matter to the city council. The city council shall then review the matter and upon approval of the same shall release the balance of the security posted by the subdivider under the bond agreement.

O. Expiration of Final Approval. If the final plat is not recorded within twelve (12) months from the date of city council approval, such approval shall be null and void. This time period may be extended by the city council for up to an additional ~~six~~ twelve (~~6~~12) month period for good cause shown. The subdivider must petition in writing for this extension prior to the expiration of the original six months. No extension will be granted if it is determined that it will be detrimental to the city. If any of the fees charged as a condition of subdivision approval have increased, the city may require that the bond estimate be recalculated and that the subdivider pay any applicable fee increases as a condition of granting an extension.

Adopted by Ord. 374-15 on 11/18/2015
Amended by Ord. 388-17 on 3/1/2017

16.16.040 Vacating Or Changing A Recorded Subdivision Plat

A subdivision plat shall only be vacated or changed in accordance with state law as set forth in Section 10-9a-608, Utah Code Annotated, as amended.

Adopted by Ord. 374-15 on 11/18/2015

16.20 Improvements

- 16.20.010 Parks, School Sites And Other Public Spaces
- 16.20.020 Public Improvements

16.20.010 Parks, School Sites And Other Public Spaces

A. In subdividing property, consideration shall be given to suitable sites for schools, parks, playgrounds and other areas for public use. Any provision for such open spaces should be indicated on the preliminary plat in order that it may be determined by the planning commission when and in what manner such areas will be dedicated to, or acquired by, the appropriate agency.

B. The planning commission may, in the public interest, require that the subdivider set aside land for parks, playgrounds, schools, churches and other public structures, within the boundaries of a subdivision.

1. Subdividers may not be required to hold land set aside for churches, schools, parks exceeding ten thousand (10,000) square feet, and other public structures for more than one year without payment being made for the same on the basis of land and improvement costs.
2. Parks and neighborhood playgrounds of less than ten thousand (10,000) square feet, when required, shall be maintained by the neighborhood homeowners' association (HOA).
3. In subdivisions of less than forty (40) lots, the subdivider may not be required to dedicate more than one twenty-fifth as much land as there is in lots, not streets, for parks or playgrounds without payment.

Commented [JJ82]: State Law - can have a separate bond for warranties of 10%

Commented [CB83]: Ben – what if the subdivision is being constructed?

Commented [JJ84]: State Law - I think this is a negotiation - can't just say "you shall set this aside". Especially true for churches.
In conflict with exaction and impact fee provisions. Discuss and update . Title 17 exaction definition also out of complaince
10-9a-508. Exactions -- Exaction for water interest -- Requirement to offer to original owner property acquired by exaction.

(1) ...

Commented [CB85]: Ben – hold for how long?

4. For subdivisions greater than forty (40) lots, each group of forty (40) lots, or fraction thereof, may require additional dedicated park and playground area at the same ratio as for less than forty (40) lots.

Adopted by Ord. 374-15 on 11/18/2015

16.20.020 Public Improvements

A. Design Standards. The city engineer shall prepare standards and specifications for design, construction and on-site review of all public improvements including streets, curbs, gutters, sidewalks, water distribution systems, sewage disposal facilities and storm drainage and flood control facilities. Standards for fire hydrants shall meet the requirements of any federal, state and local governmental entities having jurisdiction over such hydrants.

All construction standards and specifications shall be approved by ~~resolution of~~ the city council before becoming effective. All public improvements shall be installed in accordance with the city's construction standards and specifications, the requirements of the city engineer and public works department, the subdivision improvements agreement between the subdivider and the city, and all other applicable city ordinances and regulations.

~~A.~~

The approval of all subdivisions, including minor or small subdivisions, will require the installation of all public improvements including asphalt, curb and gutter, sidewalk, street lights and utilities which are required to complete the standard street design included in the City's design standards regardless of whether the required improvements are on a new or existing street. The city council may waive, modify or delay the construction of all or part of the required public improvements upon making specific findings supporting its decision consistent with the following standards.

1. Curb, gutter and sidewalk improvements in the R-1-10, R-1-22, and A-1 zoning district are eligible for deferred construction under a deferred improvements agreement when the city council finds compelling reasons why the city's interests are better served by deferring the construction.
2. The city council may waive, modify, or defer the requirement to pipe an open ditch that has been previously designated by the city to remain open upon a finding that the waiver, modification, or deferral is in the public interest. All other open ditches in the subdivision are required to be piped according to the size requirements of the city drainage master plan as a condition of the subdivision approval.
3. The construction of any public improvements deferred under this section shall be subject to a deferred improvements agreement that allows the City to determine when, if ever, such construction will be required.

B. Construction Plans. Complete and detailed construction plans and drawings of all improvements shall be prepared in conformance with the design standards of the city. These plans and drawings shall address all proposed street utilities and shall be submitted to the city engineer for review with the final plan. Final approval of the project shall not be granted until these plans have been reviewed and recommended for approval by the city engineer. No construction shall be started until these plans have received final approval of the city ~~and the final plat has been recorded~~.

C. Standards for Construction Plans. The city has established standards with respect to construction plans for the purpose of achieving consistency in drawings and uniformity in plan appearance, clarity, size and reproduction. These standards and specifications shall serve as minimum requirements for all aspects of proposed developments and subdivisions.

Commented [JJ86]: State Law - after recommendation of the PC - now required

Commented [CB87R86]: Ordinance?

Formatted: Indent: Left: 0.5", No bullets or

Commented [JJ88]: State Law - is there a manual and name for reference?

Commented [JJ89]: State Law - too opened ended, such as?

Commented [CB90R89]: Such as adjacent to or contiguous with other improvement?

Commented [JJ91]: State Law - too vague - such as preservation of the rural character - what "interest"?

Commented [JJ92]: Policy - grading not allowed?

Three copies of initial construction plans shall be submitted for all proposed subdivisions and developments. Of these copies, one set shall be used by the city engineer and the public works department, one set shall be retained by the city, and one set shall be returned to the subdivider for corrections and revisions consistent with the recommendations of the city and the city engineer. After these corrections and revisions have been made by the subdivider, three revised sets shall be submitted to the city for final review by the city engineer.

~~C.~~

All drawings and/or prints shall be clear and legible and conform to good engineering and drafting practice. All drawings shall be twenty-four (24) inches by thirty-six (36) inches (trim line) or twenty-two (22) inches by thirty-four (34) inches (trim line) with a one-half inch border on the top, bottom and right side of the plan and a one and one-half inch border on the left side.

The plans shall include the following, and separate sheets may be used as needed to detail the required information.

1. A north arrow;
2. Stationing and elevations for profiles;
3. U.S.G.S. datum for all elevations;
4. A title block located in the lower right corner of the sheet which shall include:
    a. Project title (subdivision, etc.),
    b. Specific type and location of work, and
    c. Name of engineer or firm preparing drawings with license number and a Utah Engineers stamp imprint;
5. Scale information at 1 inch~~"~~ = 20 feet,~~'~~ or larger~~1" = 40'~~ horizontally; and 1 inch~~"~~ = 2 feet~~'~~ or 1 inch~~"~~ = 4 feet~~'~~ vertically;
6. For curb and gutter plans, plan view and profiles for each side of the street including curve data for top of curb elevations but excluding street center line profile data at a 1 inch = 20 feet horizontal scale, or larger;
7. Size and location of all culinary water lateral mains, meters, valves and hydrants which sizes and locations shall be subject to the specifications of the city engineer;
8. Data regarding types of pipe proposed;
9. Size and location of irrigation lateral mains, valves, fittings and other features of the irrigation system; and
10. Size and location of drains and subdrains to the sewer and storm drain systems as well as for their manhole clean-outs.

D. Preconstruction Meetings. Prior to excavating or starting construction, the subdivider shall arrange a preconstruction meeting with the city engineer and the public works department. The subdivider shall bring to the meeting all contractors responsible for building the improvements associated with the project. The purpose of this meeting shall be to:
    1. Verify the ~~recordation of the plat and the~~ final approval of all plans;
    2. Determine the construction schedule;
    3. Determine the names, addresses and phone numbers of all persons involved in the construction of the project, including contractors and inspectors;
    4. Review all plans and any city imposed special conditions or requirements;
    5. Review any bond reduction requests;
    6. Coordinate on-site review and testing times; and
    7. Discuss the city standards and specifications.

Formatted: Indent: Left: 0.5", No bullets or

Commented [JJ93]: Editng - repetitive?

E. On-Site Construction Review. All construction requiring the installation of public improvements in a subdivision shall be subject to on-site review by the city engineer or the public works department under direction from the city engineer.

Daily on-site review shall be required on the following types of work:

1. Placement of street surfacing;
2. Placement of concrete for curbs, gutters, sidewalks and other structures; and
3. Placement and testing of drainage and water pipes, valves, hydrants.

Periodic on-site reviews shall be required on the following:

a. Street grading and placement of gravel base;
b. Excavations for curbs, gutters and sidewalks; and
c. Excavations for all structures.

F. Requests for On-Site Review. Requests for on-site review shall be made to the city engineer by the person responsible for project construction. Such requests shall be made at least one working day prior to the commencement of construction.

G. Correcting Defective Work. Periodic on-site reviews shall be made by the city engineer, or public works department under direction of the city engineer, at various phases of construction. Any faulty or defective work shall be corrected by the subdivider or subdivider's contractor within a period of thirty (30) days from the date of the on-site review wherein the faulty or defective work is noted and written notice is given to the subdivider and/or contractor.

Adopted by Ord. 374-15 on 11/18/2015

16.24 Variances And Appeals

Commented [JJ94]: Policy - Seems an odd location for this - this section should just refer to the NCUs chapter (Title 17) and add to that?

- 16.24.010 Appeal Authority
- 16.24.020 Variances
- 16.24.030 Appeals

16.24.010 Appeal Authority

A. For purposes of requests for a variance under Section 16.24.020, appeals under Section 16.24.030 or appeals from a fee charged under this title in accordance with Utah Code Ann. § 10-9a-510, as amended, the appeal authority shall be the city council. Notwithstanding the foregoing, in appeals under Section 16.24.030 or from a fee charged under this title, the city council will act as appeal authority concerning any issue on which the city council has not acted as land use authority. To the extent of any issue on which the city council acted as land use authority, any appeal shall be made to district court in the manner provided by law.

Commented [JJ95]: State Law - Sorry, too biased and involved in the process - need a separate, objective body

B. The appeal authority shall act in a quasi-judicial manner, shall serve as the final arbiter of issues involving the interpretation or application of land use ordinances under this title, and shall respect the due process rights of each of the participants in the appeal or request for variance. Except as otherwise specifically provided in this chapter, the procedures for appeal, including time for appeal, burden of proof, and standard of review, shall be those set forth in Chapter 17.08.

Commented [JJ96]: State Law - hard for a city council to do this

Commented [JJ97]: State Law - still can go to court

Adopted by Ord. 374-15 on 11/18/2015

16.24.020 Variances

A. Any subdivider desiring a waiver or modification of the requirements of this title as applied to the property to be subdivided may apply to the city council, acting as the appeal authority, for a variance from the terms of this title.
B. The city council may grant a variance only if:
    1. Literal enforcement of the provisions of this title would cause an unreasonable hardship for the applicant that is not necessary to carry out the general purpose of the city's land use ordinances;
    2. There are special circumstances attached to the property that do not generally apply to other properties in the same zoning district;
    3. Granting the variance is essential to the enjoyment of a substantial property right possessed by other property in the same zoning district;
    4. The variance will not substantially affect the general plan and will not be contrary to the public interest; and
    5. The spirit of the land use ordinance is observed and substantial justice is done.
C. In determining whether or not enforcement of the provisions of this title would cause unreasonable hardship under Subsection B(1), the city council may not find an unreasonable hardship unless the alleged hardship:
    1. Is located on or associated with the property for which the variance is sought; and
    2. Comes from circumstances peculiar to the property, not from conditions that are general to the neighborhood.
D. In determining whether or not enforcement of the land use ordinance would cause unreasonable hardship under Subsection B(1), the city council may not find an unreasonable hardship if the hardship is self-imposed or economic.
E. In determining whether or not there are special circumstances attached to the property under Subsection B(2), the city council may find that special circumstances exist only if the special circumstances:
    1. Relate to the hardship complained of; and
    2. Deprive the property of privileges granted to other properties in the same zone.
F. The applicant shall bear the burden of proving that all of the ~~conditions~~ criteria justifying a variance have been met.
G. Variances run with the land.
H. The city council may not grant a use variance.
I. In granting a variance, the city council may impose additional requirements on the applicant that will:
    1. Mitigate any harmful effects of the variance; or
    2. Serve the purpose of the standard or requirement that is waived or modified.
J. The city council shall issue a written decision, including findings, with respect to the request for variance. Such written decision will be final when issued, and may thereafter be appealed to district court in accordance with applicable law.

Adopted by Ord. 374-15 on 11/18/2015

16.24.030 Appeals

Any person aggrieved by any decision, determination, or requirement of the planning commission, zoning administrator, or city engineer, under this title, or by a fee charged under this title in accordance with Utah Code Ann. § 10-9a-510, as amended, may appeal such decision, determination, requirement or fee to the city council under this chapter in accordance with the appeal procedures set forth in Chapter 17.08. Any person aggrieved by any decision, determination, or requirement of the city council under this title may appeal such decision to district court in the manner provided by law.

Adopted by Ord. 374-15 on 11/18/2015

Commented [JJ98]: State Law - again

Commented [JJ99]: State Law - all of the following are met

Commented [JJ100]: Stae Law - what are the "conditions" - maybe this should be "criteria"

Commented [JJ101]: State Law - again

16.28 Drainage And Subsurface Water Control

- 16.28.010 Purpose
- 16.28.020 Applicability
- 16.28.030 Interpretation
- 16.28.040 Conflicts
- 16.28.050 Definitions
- 16.28.060 Hydrology Report
- 16.28.070 Drainage Plan
- 16.28.080 Off-Site Improvements
- 16.28.090 Drainage Onto Other Properties
- 16.28.100 Drainage Of Impervious Surfaces
- 16.28.110 Catch Basins
- 16.28.120 Existing Natural Drainage
- 16.28.130 Drainage Fee
- 16.28.140 Development Restrictions
- 16.28.150 Appeals
- 16.28.160 Violations; Penalties

16.28.010 Purpose

The purpose of this chapter is to provide for the positive and adequate abatement and handling of all surface and subsurface water, including storm runoff from all new subdivisions and developments in the city, and to impose certain building restrictions to control problems due to subsurface water conditions.

Adopted by Ord. 374-15 on 11/18/2015

16.28.020 Applicability

The provisions of this chapter shall apply to all subdivisions and developments to be constructed within the city.

Adopted by Ord. 374-15 on 11/18/2015

16.28.030 Interpretation

In interpreting and applying the provisions of this chapter, the requirements contained herein are declared to be the minimum requirements for the purpose set forth.

Adopted by Ord. 374-15 on 11/18/2015

16.28.040 Conflicts

This chapter shall not nullify the more restrictive provisions of any private covenants, agreements or other ordinances or laws, including the provisions of Chapter 13.30, but shall prevail over any such provisions that are less restrictive.

Adopted by Ord. 374-15 on 11/18/2015
Amended by Ord. 382-16 on 10/3/2016

16.28.050 Definitions

For the purposes of this chapter, the following words shall have the meanings herein prescribed:

"**Catch basin**" means an opening into a storm drain system for the entrance of surface storm runoff.

"**Civil engineer**" means an engineer registered under the provisions of the state of Utah.

"**Developer**" means any person, firm or corporation engaged in creating a development as defined herein.

"**Development**" means any commercial, industrial, residential, public or recreational project and any single lot residential development or any commercial, industrial, residential, public or recreational redevelopment or remodeling which will cause changes in the existing drainage pattern or system.

"**Discharge of drainage**" means the emptying of collected waters from a drainage system into a manmade drainage way or natural channel.

"**Drainage**" means the interception and removal of surface and subsurface water by artificial or natural means. It also refers to the water collected by such interception and removal.

"**Drainage facilities**" means all pipes, catch basins, pumps, man-made drainage ways, natural channels, etc., designed to collect and carry drainage.

"**Drainage plan**" means a plan showing all drainage facilities, both on and off-site, designed to carry all surface and subsurface waters from a subdivision or development.

"**Drainage way**" means any natural channel, stream, manmade channel, canal or other such structure designed to carry water flows.

"**Engineer/geologist**" means a person with an accredited degree in geology or geological engineering, with at least five years experience in the field or geological studies relating to hydrological problems.

"**Erosive**" refers directly to the point in time when the stream bed of a natural channel begins to be scoured, worn or deteriorated due to the water flow in said channel.

"**Estuary**," for purposes of this chapter, is defined as Mill Creek, Stone Creek, Barton Creek and such other natural drainage ways or manmade canals and ditches as may be approved periodically by the designated city official.

"**Excavation**" means any disruption of the soil mantle and/or manmade surfacing of the same. Excavations may be either in the nature of a process or a use. Excavations undertaken for the purpose of preparing a site for an ultimate land use or for repairing or constructing urban service facilities are processes, whereas excavations such as gravel pits, quarries or mines are uses which require specific use authorization in the zoning district where located in addition to a conditional use permit if such is required.

"**Existing natural grade**" means the actual elevation of the ground surface before excavation or filling takes place.

"**Finished grade**" means the actual elevation of the ground surface after excavation or filling has taken place.

"**Flooding**" means an unusual abundance of water which overflows land not normally covered with water.

"**Geologist**" means a person with an accredited degree in the field of geology and at least five years experience with specific application in hydrological studies.

"**Geologist/hydrologist**" means a person with an accredited degree in geology or hydrology with at least five years experience in the field of geohydrology.

"**Grading plan**" means a plan outlining the excavation or fill proposed for the subdivision or development, including a description of the conditions resulting from such excavation or fill.

"**Groundwater**" means water beneath the surface of the ground which is in the saturated zone below the water table.

"**Hydrology**" means the study of the processes involved in the transfer of moisture from one body of water to the land and back to another body of water.

"**Hydrology report**" means an analysis of the hydrologic processes involved on a parcel of ground in relation to a subdivision or development.

"**Lot**" means a parcel or portion of land established for purposes of sale, lease, finance, division of interest or separate use, or separated from other lands by description on a subdivision map and/or parcel map, and having frontage upon a street.

"**Manmade drainage way**" means any open or enclosed channel or structure constructed by man for the purpose of conveying drainage water.

"**Natural channels**" means drainage ways which have been created by nature.

"**Off-site improvements**" means any drainage facilities which are necessary for the conveyance of the drainage from the subdivision or development to a major drainage way and which occur on land other than that of the proposed site.

"**One hundred (100) year storm**" means a statistical storm event that has the chance of occurring once in one hundred (100) years, or one percent chance of happening in any given year.

"**Perpetual conveyance of irrigation water**" means the continued flow of irrigation water to the respective users of such water.

"**Standard project flood**" means the flood which could occur from the most severe combination of meteorological conditions characteristic of the area, excluding extremely rare combinations.

"**Storm drain system**" means the system of drainage facilities designed to carry storm water runoff.

"**Storm runoff**" means storm water which drains off surface due to flow exceeding infiltration capacity.

"**Subsurface drain**" means an underground conduit designed to permit infiltration for the purpose of collecting subsurface water.

"**Subsurface water**" means water beneath the surface of the ground.

"**Surface water**" means water which rests on the surface of the ground or is not covered by any earth or rock: for example, rivers, ponds and lakes.

"**Sump condition**" means water restricted to an inlet area because the inlet is located at a low point.

"**Upward leakage**" means vertical seepage in an upward direction through an aquifer caused by hydrostatic pressure.

"**Water rights**" means legal rights to use of water held by individuals and corporations referring directly to parcels of land on which such water is used.

"**Water table**" means the level below which the ground is saturated with water.

"**Wells**" means any pipe, excavation or access below the surface of the ground having been used or currently being used as a source of water.

Adopted by Ord. 374-15 on 11/18/2015
Amended by Ord. 382-16 on 10/3/2016

16.28.060 Hydrology Report

A hydrology report shall be prepared and submitted to the City at the expense of the subdivider or developer by a qualified person or firm in the field of hydrological studies (i.e., civil engineer, engineer/geologist, geologist, hydrologist) in which a minimum of the following shall be done:

A. Flooding. Analyze the flood or inundation potential of the proposed subdivision or development site. This analysis shall include:
    1. A storm water plan and design calculations in accordance with Section 13.30.080 and the city's design standards. Runoff calculations should be based on a saturated soil mantle;
    2. A standard analysis of any meandering streams which are either on, near, or pass through the proposed site;
    3. A history of prior flooding; and
    4. An evaluation of the effects of short duration, high intensity rainstorms and rapid snow melt on the proposed subdivision or development and downstream properties for ten, twenty-five, and one hundred year storms.
B. Other Surface Hydrology.
    1. Define the capability of existing natural channels and other man-made drainage ways to accommodate the estimated increase in storm drainage flow due to the proposed subdivision or development;
    2. If a natural stream channel is to be used for the discharge of drainage waters, define at what point the water flow and velocity is erosive. If the stream channel or banks will erode, specify what measures will be taken to minimize such erosion;
    3. Make an estimate or measurement of minimum and maximum flows in manmade and natural drainage ways; and
    4. Describe all existing drainage ways, both natural and manmade, including any irrigation, well discharge and subsurface drains which presently are on, near or pass through the proposed site and evaluate how such existing drainage flow patterns will be maintained by the proposed subdivision or development.
C. Subsurface Hydrology.
    1. Identify existing or potential subsurface water problems (i.e., flooded basements, ponding, etc.) due to high water table, areas of upward leakage, existing subsurface drains (including locations of any known old, wooded subsurface drains common in the city) and describe how the proposed drainage system will help solve the problems; and
    2. Identify any existing or potential wells on the site and describe the steps to be taken to protect such wells from pollution.
D. Geology.
    1. Investigate exposed and subsurface earth materials, including elements, geologic composition, limitations and geologic hazards;
    2. Specify existing geologic and soil conditions, including physical properties and engineering behavior (i.e., shrink-swell capacity), of unconsolidated geologic formations; and
    3. Analyze the impact of any geologic or hydrologic hazards upon present or potential uses.

Adopted by Ord. 374-15 on 11/18/2015
Amended by Ord. 382-16 on 10/3/2016

16.28.070 Drainage Plan

A. Drainage Delivery. All subdividers and developers shall submit a plan of drainage facilities consistent with Section 13.30.080 designed to carry all surface and subsurface waters, which are or could become either a hazard or a public nuisance, to the nearest practicable drainage way as approved by the public works director or city engineer as an acceptable place to deposit such waters.
B. Design Standards. The plan must specify for approval by the public works director or city engineer all facilities design, pipe sizes, materials and appurtenances.

C. Time of Submission. The drainage plan shall be submitted along with the preliminary subdivision plat or preliminary site plan for development. This plan will include a computation of the drainage fee as specified in this chapter.
D. Approval. Final approval of the drainage plan will be given at the time of the subdivision final plat approval. No subdivision plat or development plan will receive final approval without acceptance of the drainage plan.
E. If the final plat is not recorded within twelve (12) months from the date of city council approval, the drainage plan approval will be null and void. This time period may be extended by the city council for upto an additional six (6) month period for good cause shown. The subdivider must petition in writing for thisextension pri or to the expiration of the original six (6) months. No extension will be granted if it is determin edthat it will be detrimental to the city. If any of the fees charged as a condition of subdivision approval haveincreased, the city may require that the bond estimate be recalculated and that the subdivider pay any applicablefee increases as a condition of granting an extension.

Adopted by Ord. 374-15 on 11/18/2015
Amended by Ord. 382-16 on 10/3/2016
Amended by Ord. 388-17 on 3/1/2017

16.28.080 Off-Site Improvements

It is the responsibility of the subdivider or developer to make all off-site improvements necessary to convey any drainage for a one hundred year storm event from the subdivision or development to the accepted and designated drainage way as specified in Section 16.28.070(A) of this chapter.

A. Costs. All costs for such improvements shall be paid by the subdivider or developer.
B. Provision for Further Development. Should it be determined by the designated city official that further development may necessitate larger than normal size drainage facilities, the subdivider or developer shall be required to make such improvements; provided, however, that the proportional cost for such additional improvements will be reimbursed as funds are available through a storm drain impact fee account.
C. Storm Drain Impact Fee Account. A fund to be known as the storm drain impact fee account shall be established to provide for the upgrading of the city's drainage system. The fund shall consist of the fees collected under Section 16.28.130 of this chapter.

Adopted by Ord. 374-15 on 11/18/2015
Amended by Ord. 382-16 on 10/3/2016

16.28.090 Drainage Onto Other Properties

Waters shall not be drained onto other properties not in the same ownership without written permission from the owner of the adjacent property. When a ditch or drainage channel under private ownership is to be used, written permission from either the president of the ditch company when an incorporated ownership, or from all property owners using the ditch must be obtained.

Adopted by Ord. 374-15 on 11/18/2015

16.28.100 Drainage Of Impervious Surfaces

Whenever any surface of a lot, plot, parcel or portion thereof is excavated, filled, graded or hard-surfaced with impervious material (i.e., streets, driveways, sidewalks, parking lots, etc.), adequate surface drainage shall be provided. Such drainage will connect directly into the overall site drainage system for the subdivision or development as approved by the designated city official.

Adopted by Ord. 374-15 on 11/18/2015

Commented [JJ102]: Policy - proportional cost?

Commented [JJ103]: Policy - any low impact development techniques?

Formatted: Highlight

16.28.110 Catch Basins

Catch basins shall be placed in the gutter at all sump locations and elsewhere at the direction of the city council. In no case shall surface water be allowed to be carried in a gutter for more than eight hundred (800) feet without the installation of a catch basin or other approved device or as required by the hydrology report for depositing the surface water into an acceptable storm drain system.

Adopted by Ord. 374-15 on 11/18/2015

16.28.120 Existing Natural Drainage

Existing natural surface and subsurface drainage of the ground surrounding the proposed lot or plot shall not be impeded by any off or on-site construction and improvements.

Adopted by Ord. 374-15 on 11/18/2015

16.28.130 Drainage Fee

A. Intent. For the purpose of upgrading the storm drainage system, a storm drainage impact fee shall be assessed for all new subdivisions and developments in the city. This fee shall be paid at the time of final drainage plan approval and prior to the issuance of any building permits. Approval shall not be given if such fee is not paid.
B. Determination of Fee. The subdivider or developer, or anyone seeking a building permit, shall pay a fee which shall be determined by a formula that shall be established periodically by resolution of the city council.

Adopted by Ord. 374-15 on 11/18/2015

16.28.140 Development Restrictions

Upon review of the hydrology report and drainage plan, additional restrictions may be placed on the construction of all residential dwellings, buildings, or other edifices within the subdivision or development to include, but not be limited to the following:

A. No residences, buildings or structures shall be constructed below existing natural grade;
B. Foundations for any residence, building or structure shall be placed on existing natural grade;
C. The site shall be filled to finish grade in accordance with a previously submitted and approved grading plan; and/or
D. All finished floor elevations on buildings constructed shall be at least twelve (12) inches above the curb, or street, or proposed street, level adjacent to the building except when otherwise approved by the city engineer and city council. Below floor or crawl space area shall not exceed 48 inches in height as measured from the bottom of the supporting floor member to the top of the finished ground surface. Below floor or crawl space area shall not exceed 60 inches in height as measured from the bottom of the supporting floor structure to the top of a finish floor where the finish floor is one foot or above the curb or street elevation. Below floor or crawl space area which is located below the street or curb elevation is not considered to be finished floor area and is not approved for domestic use including storage.
E. No residential development shall be allowed that places streets below elevation 4216.00 or finish floors below 4218.00.
F. No commercial or industrial development shall be allowed that places the streets below elevation 4216.00 or the finish floor below elevation 4217.00.

Adopted by Ord. 374-15 on 11/18/2015
Renumbered by Ord. 382-16 on 10/3/2016

~~**16.28.150 Appeals**~~

Commented [JJ104]: State Law - all should be to the appeal authority - not this progressive suggestion

~~A. Any person, firm or corporation aggrieved by the decision of any authorized official regarding this chapter may appeal such determination to the planning commission by filing a written notice of appeal with the City Recorder within ten (10) calendar days following the authorized official decision.~~

~~B. Any person, firm or corporation aggrieved by any decision of the planning commission regarding this chapter may appeal to the city council by filing a written appeal with the city recorder within ten (10) calendar days of the planning commission's decision. Such appeal will be placed on the city council's meeting agenda, consistent with requirements of the open meeting law.~~

Adopted by Ord. 374-15 on 11/18/2015
Renumbered by Ord. 382-16 on 10/3/2016

16.28.160 Violations; Penalties

A. Any person, firm or corporation who shall create, or cause to be created, a development as defined herein, or construct a building within the limits of the city, without complying with the provisions of this chapter, or who shall violate any provisions hereof shall be deemed guilty of a Class B misdemeanor. Each day in which any such violation shall continue, or be permitted, shall be deemed a separate offense.

B. The city shall authorize the necessary public officials and/or officers to investigate and make reports to the planning commission of any such violations. The planning commission, if it finds that such a violation does exist, may recommend that legal action be taken by the city council.

Adopted by Ord. 374-15 on 11/18/2015
Renumbered by Ord. 382-16 on 10/3/2016

West Bountiful City — September 11, 2018
Planning Commission Meeting

PENDING- Not Yet Approved

Posting of Agenda *- The agenda for this meeting was posted on the State of Utah Public Notice website and on the West Bountiful City website on September 7, 2018 per state statutory requirement.*

Minutes of the Planning Commission meeting of West Bountiful City held on Tuesday, September 11, 2018 at West Bountiful City Hall, Davis County, Utah.

Those in Attendance:

MEMBERS PRESENT: Chairman Denis Hopkinson, Alan Malan, Mike Cottle, Laura Charchenko, Dee Vest (alternate) and Council member Kelly Enquist

STAFF PRESENT: Ben White (City Engineer), Cathy Brightwell (Recorder), Debbie McKean (Secretary)

VISITORS: Gary Jacketta and Stephen Sundstrom

The Planning Commission Meeting was called to order at 7:30 pm by Chairman Hopkinson. Dee Vest offered a prayer.

1. Accept Agenda

Chairman Hopkinson reviewed the agenda. Laura Charchenko moved to accept the agenda as presented and Alan Malan seconded the motion. Voting was unanimous in favor among all members present.

2. Discuss Possible Changes to Title 17- Yard Regulation

Commissioner's packet included a memorandum dated September 7, 2018 from Ben White regarding Title 17 – Rear Yard Encroachment with an attached example of a resident's request for a covered patio.

Ben White explained that a resident challenged why our city code in the R-1-10 would not allow a roof over a rear yard patio to encroach into the thirty-foot rear setback. The City Council has requested the Planning Commission to explore whether there would be a permissible application for structures such as patio coverings to encroach into the 30' rear setback. Mr. White explained what the resident would like to do and displayed a picture of his proposal. The setback would be 25 feet from the rear property line and the patio will not be an enclosed structure.

Chairman Hopkinson reviewed some of the discussions that have been had in the past regarding setback regulations. He explained that the person(s) impacted by the lesser encroachment are the neighbors surrounding the structure not the person building the structure. He noted that our setbacks are specific to what West Bountiful citizens desire. This has been discussed in detail before. He invited comments from each Commissioner.

Commissioner Comments:

Alan Malan understands the request but feels that there must be some restrictions and guidelines set to maintain some control and consistency. He pointed out that he could build a roofed structure 10 feet away from his property line and home if he desired.

Laura Charchenko said that while this request does not cause her problems, there are some situations where it may matter and that once allowed a can of worms may be open . She posed the question - where do we draw the lines within the setback requirement? She is open to exploring the idea of change but feels there was a reason it was restricted in the first place.

Mike Cottle understands what we are trying to preserve but does not see that this particular situation hurts anything.

Dee Vest concurs with Commissioner Cottle and feels that 20 feet is a reasonable setback for both a covered and uncovered deck. He commented that height may be a factor, but this request is for a ground level patio cover.

Councilmember Enquist asked for clarification on the setback of 20 feet and Mr. White explained what the restriction is and that it is not a covered structure. Mr. White pointed out the difference between a covered deck and an enclosed structure.

Points for discussion include:

- Uncovered decks are allowed to encroach into the rear setback up to 200 sq. feet and within 20 feet of the rear property line.
- Would a height restriction on a patio cover allow it to be a permitted use?
- What encroachment into the rear yard might be acceptable?
- Does the permissible encroachment distance change with size or height?
- Once allowed, would it be hard to close the permitted use. Gabled structures vs single pitched structures. Gable requires a taller roof peak
- Separation of patio covers vis deck covers can be difficult.
- What is the reason the city has the restriction of the 30” setback requirement?
- Does this request have any impact on the city’s accessory structure standard?

Chairman Hopkinson pointed out that maybe in this situation the setback may not matter but offered some examples where it could matter. He noted that in order to get a setback allowance for a deck, residents must come before the Planning Commission for a conditional use permit. The code would have to be specifically defined to make things work well.

Some discussion took place regarding pros and cons. Chairman Hopkinson wants to do what the citizens of West Bountiful want and leans more toward keeping the code as is. He does not want to put it into a conditional use situation or place staff in a position to have to make tough decisions in each request. He would like it to be a cut and dry code that matches the feel of what West Bountiful is.

Chairman Hopkinson would like to have a draft that could be forwarded to the City Council reflecting their views on this situation.

3. Discuss Proposed Changes to Chapter 16 – Subdivisions

Planning Commissioners received a memorandum dated September 7, 2018 from Ben White regarding Title 16 - House Keeping and Miscellaneous Changes, along with a redline copy of Chapter 16 - Subdivisions.

Mr. White explained that earlier this year the City hired a consultant, John Janson, to review our municipal code to see if it conformed with the current State Code. A redline copy of Chapter 16 with proposed changes from both Staff and Mr. Janson are provided this evening for commission review. He informed them that Steve Doxey has reviewed the document as well. Some of the changes to note in this document are as follows:

- Definitions have been updated to match state code, city code and to be clearer to understand.
- Requirements for issuing a building permit have been revised to match State Code.
- Fee language has been simplified and fee schedule has been updated to reflect the current adopted fee schedule.
- A Future Transportation Plan is being prepared to be reviewed and adopted by the City. This will include future street requirements for right of way widths and road placements for streets.
- Staff would like to change the remnant parcel size to 2000 square feet rather than left as the minimum size permitted by the zone.
- Language has been clarified that the 6-month extension must be requested prior to the expiration of the 12- month approval.
- Bonding requirements changed to match State Code. Improvement bonds are reduced from 110% of the estimated cost of improvements to 100%
- Section 16.28.150 Appeals section is being deleted and will be addressed according to the procedures that are already outlined in the code.

Chairman Hopkinson asked staff to point out what language is to comply with State Code and what is being suggested from Staff and the Consultant.

Ben White stated that clarification is key to this document as well. Some definitions, language/ clarification/housekeeping, grammar, code compliance, an added transportation plan, etc. are all included in the changes made in this document. He walked the commission through the document reviewing each page and pointed out the changes being proposed and who suggested the change.

Mr. White noted that on page 11 there is a substantive change regarding remnant parcels that changes the size from the minimum size of the zone to 2000 square feet. This change will make it easier to deal with remnants in one acre and half acre zones.

Some discussion took place regarding removing language on page 19 – K. Security for Public Improvements, Section f. Chairman Hopkinson prefers the language be kept in that allows the city to withhold building permits until all improvements are complete. Mr. White explained that state law prohibits us from doing that. Commissioners agreed with Chairman Hopkinson in principle but realize

that it cannot be enforced per State Code therefore there is no reason to keep the language in the document. Ben pointed out that State Code trumps City Code and it is important to be compliant with State Code. If the language is left in, the city would not be able to enforce it; State law dictates what the City can do.

Chairman Hopkinson asked to clarify the definition of Subdivision on Page 5 and reword the language so it is easier to understand. Cathy noted that the language was copied from State Code word for word.

Mike Cottle asked for a correction on Page 9, #4 to strike "every".

Alan Malan pointed out the following changes he would like to see made:

- Page 3-top, construction standards are not in code. Ben White agreed that some of our construction standards should be included in this document but not all of them.
- Page 4, Subdivision - 1. Of should be "or". Also is there better language for "re-subdivided?".
- Page 5, regarding lot line adjustments. Ben is trying to define the process that needs to be followed according to the State requirements for plat amendments.
- Page 7b, - last sentence "or the developer" be added.
- Page 8-top, E1 does not match the language found in A under Fees. Ben clarified that there are 3 different application fees. He will see if he can clarify that language.
- Page 11, does not like changing the lot remnants language. He would like a period after adjacent lots. Chairman Hopkinson argued what if there are no adjacent lots. Some discussion took place regarding remnant pieces of land and what to do with it.
- Page 13, regarding electronic copies (are two copies necessary?). Ben answered to the affirmative.
- Page 15, Is there a way to list a standard size of constructions drawings?

Councilmember Enquist asked if the definition on page 8 regarding a mylar flat an outdated term.

Material discussed so far this evening regarding this document satisfied the questions and comments of the other Commissioners present.

3. Staff Report

Ben White:

- We will not be reviewing the Grover Subdivision at this time. Purchase contract expired but Mike Cottle said that it has been reinstated.
- Mountain View Estates was approved by City Council at their last meeting.
- McKean Subdivision passed the water test but did not pass the second time. It must pass inspection two times in a row.

Cathy Brightwell:

- Secondary Water will be shut down on October 1st instead of October 15.

5. Consider Approval of Minutes from August 14, 2018 meeting.

ACTION TAKEN:

Laura Charchenko moved to approve of the minutes of the August 28, 2018 meeting as presented. Alan Malan seconded the motion and voting was unanimous in favor.

6. Adjournment

ACTION TAKEN:

Alan Malan moved to adjourn the regular session of the Planning Commission meeting at 9:05 pm. Laura Charchenko seconded the motion. Voting was unanimous in favor.

. . . . . .

The foregoing was approved by the West Bountiful City Planning Commission on September 25, 2018 by unanimous vote of all members present.

_____

Cathy Brightwell – City Recorder