BOX ELDER COUNTY

APPROVED

ROAD, STORM DRAIN, AND FENCING STANDARD DRAWINGS

SUBMITTED & RECOMMENDED

Kent L. Jones 3/22/10
KENT L. JONES, P.E. — DATE
BOX ELDER COUNTY ENGINEER

APPROVAL

Rich VanDyke 3/23/10
DATE
BOX ELDER COUNTY COMMISSION

Bill Gilson 3/23/10
BILL GILSON — DATE
BOX ELDER COUNTY ROAD DEPARTMENT

Kevin Hamilton 3/22/10
KEVIN HAMILTON — DATE
BOX ELDER COUNTY
COMMUNITY DEVELOPMENT DIRECTOR

Lu Ann Adams 3/25/10
ATTEST, COUNTY RECORDER — DATE

BOX ELDER COUNTY

Index of Drawings

1.....TITLE PAGE & INDEX OF DRAWINGS
2.....PRIVATE ROADWAY SECTION
3.....PUBLIC ROADWAY SECTION
4.....DRIVEWAY DETAILS
5.....STANDARD STREET INTERSECTION DETAILS
6.....TYPICAL WHEELCHAIR RAMP & IRRIGATION BOX DETAILS
7.....CUL-DE-SAC DETAILS
8.....CATCH BASINS & STORM DRAIN CLEANOUT MANHOLE DETAILS
9.....TYPE V CATCH BASIN & OUTLET DIPSTONE DETAILS
10...STORM DRAIN MANHOLE & SUBSURFACE DRAINAGE DETAILS
11...FENCING STANDARD DETAILS
12...CATTLE GUARD DETAILS

JANUARY 2010

JA JONES & ASSOCIATES
CONSULTING ENGINEERS
1716 East 5600 South
South Ogden, Utah 84403 (801) 476-9767

#1 ROAD SECTION

MINIMUM RESIDENTIAL ACCESS, PRIVATE ROAD AND PRIVATE DRIVEWAY (SERVING 1 OR 2 LOTS) FOR DRIVEWAYS OVER 150' LONG

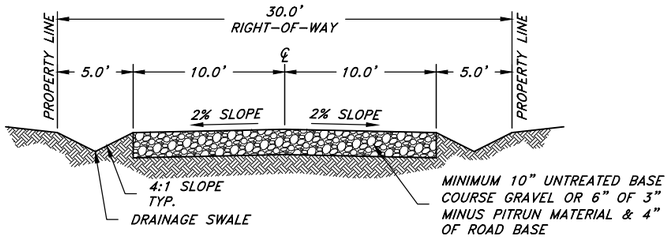

NOTE:
1. THIS GRAVEL BASE COURSE THICKNESS SHALL BE CONSIDERED AS THE COUNTY STANDARD, BUT MAY BE INCREASED BY THE COUNTY ENGINEER WHEN A GREATER DEPTH IS NECESSARY, OR FABRIC ADDED IF IN WET AREAS, TO PROVIDE SUFFICIENT STABILITY. DESIGNER AND / OR DEVELOPER MAY SUBMIT AN ALTERNATIVE PAVEMENT DESIGN BASED ON A DETAILED SOILS ANALYSIS FOR APPROVAL BY THE COUNTY ENGINEER WHICH MAY MODIFY THE ROAD THICKNESS, BUT IN NO CASE SHALL THE GRAVEL BASE COURSE BE LESS THEN 4". PRIVATE DRIVEWAYS OVER 150' IN LENGTH NEED TO BE DESIGNED TO CARRY HS-20 TRAFFIC LOADS. IT IS ALSO ACCEPTABLE FOR THE DEVELOPERS ENGINEER TO SUBMIT A DESIGN FOR THE ROAD AND CERTIFY IT FOR REVIEW BY THE COUNTY ENGINEER.
2. FIRE MARSHAL MAY CHANGE DESIGN BASED ON AVAILABLE FIRE FLOW.

GENERAL NOTE:
1. ALL ROADSIDE DRAINAGE SWALES SHALL NOT BE FILLED IN AND SHALL BE MAINTAINED BY THE HOME OWNER.
2. MINIMUM COMPACTION FOR SUB-GRADE AND ROADBASE SHALL BE 95% AS DETERMINED BY AASHTO T-180.
3. COMPACTION FOR ASPHALT SHALL BE 95% AS DETERMINED BY ASTM D-1557 (MARSHAL TEST)
4. ALL SIDEWALKS, CURB & GUTTER, AND CROSS DRAINS SHALL BE CONSTRUCTED WITH 4000 PSI CONCRETE. MINIMUM SLOPE OF CURB & GUTTER SHALL BE 0.5%.

#2 ROAD SECTION

STANDARD GRAVEL PUBLIC ROAD
APPLIES WHERE LOTS ARE 1 ACRE OR LARGER

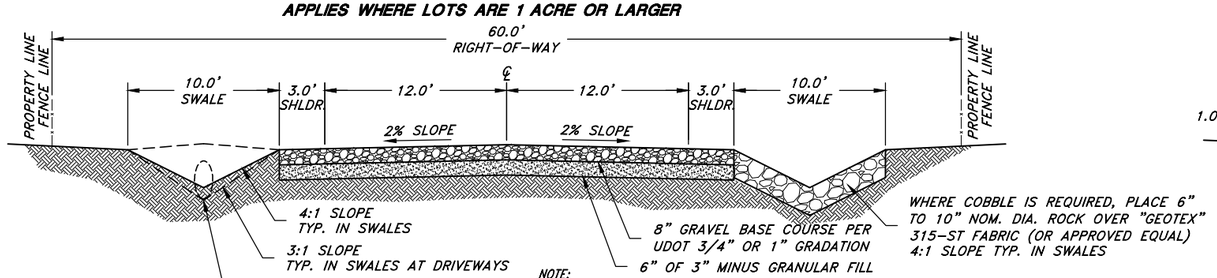

NOTE:
1. A #2 ROAD SECTION CAN BE USED IF CONTINUOUS NEW SUBDIVISION LOTS ARE FRONTING ON AN EXISTING COUNTY ROAD THAT IS NOT PAVED.
2. A #2 ROAD CAN BE USED IF A NEW SUBDIVISION IS 3 LOTS OR MORE, IS CREATING A NEW ROAD, AND IS ADJACENT TO AN EXISTING UNPAVED COUNTY ROAD WHERE THERE ARE NO COUNTY ROAD PLANS TO PAVE WITHIN THE NEXT 3 YEARS.
3. SUBDIVISION LOTS TO BE 1 ACRE OR LARGER.

#3 ROAD SECTION

STANDARD PAVED PUBLIC ROAD

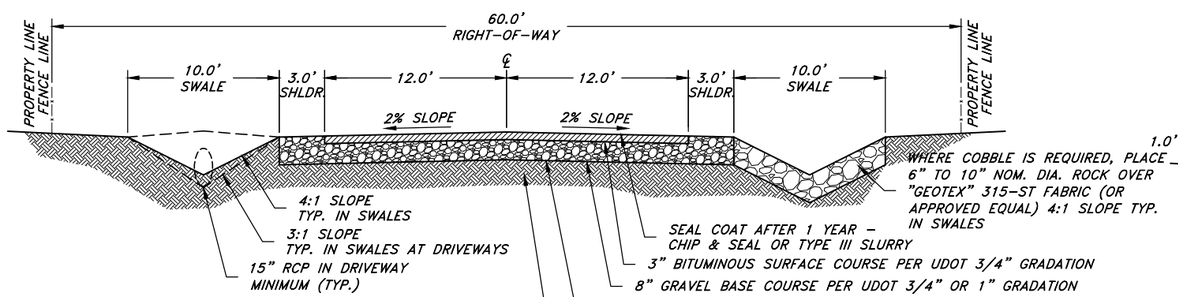

NOTE:
1. A #3 ROAD SECTION WILL BE USED WHEN A NEW SUBDIVISION ROAD IS CONSTRUCTED ADJACENT TO EXISTING PAVED ROADS.
2. A #3 ROAD SECTION WILL BE USED WHEN A NEW SUBDIVISION ROAD IS CONSTRUCTED ADJACENT TO AN EXISTING UNPAVED COUNTY ROAD, IS WITHIN 1/2 MILE OF AND EXISTING PAVED ROAD, AND THE COUNTY HAS PLANS TO PAVE THE CONNECTING ROAD WITHIN THE NEXT 3 YEARS.
3. SUBDIVISION LOTS TO BE 1 ACRE OR LARGER.

#4 ROAD SECTION

STANDARD PAVED PUBLIC ROAD
APPLIES WHERE LOTS ARE 1 ACRE OR LARGER

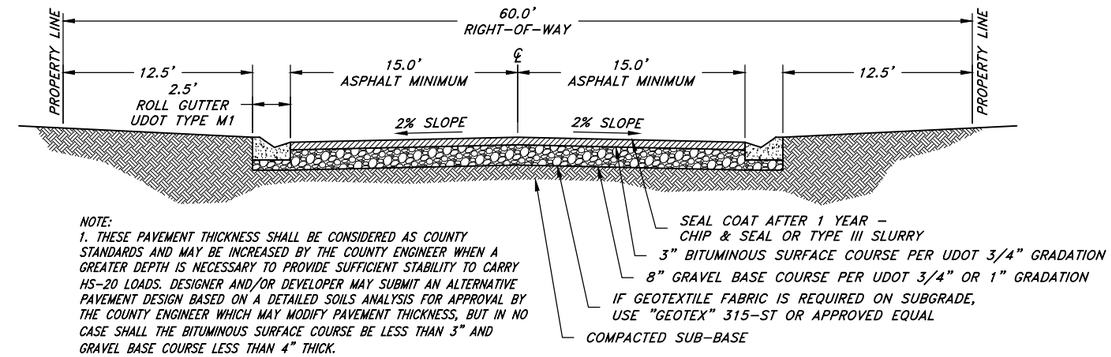

NOTE:
1. THESE PAVEMENT THICKNESS SHALL BE CONSIDERED AS COUNTY STANDARDS AND MAY BE INCREASED BY THE COUNTY ENGINEER WHEN A GREATER DEPTH IS NECESSARY TO PROVIDE SUFFICIENT STABILITY TO CARRY HS-20 LOADS. DESIGNER AND/OR DEVELOPER MAY SUBMIT AN ALTERNATIVE PAVEMENT DESIGN BASED ON A DETAILED SOILS ANALYSIS FOR APPROVAL BY THE COUNTY ENGINEER WHICH MAY MODIFY PAVEMENT THICKNESS, BUT IN NO CASE SHALL THE BITUMINOUS SURFACE COURSE BE LESS THAN 3" AND GRAVEL BASE COURSE LESS THAN 4" THICK.

#5 ROAD SECTION

STANDARD URBAN RESIDENTIAL PUBLIC ROAD
APPLIES TO 1/2 ACRE LOT ZONES OR LOTS LESS THAN 1 ACRE IN UNZONED AREAS

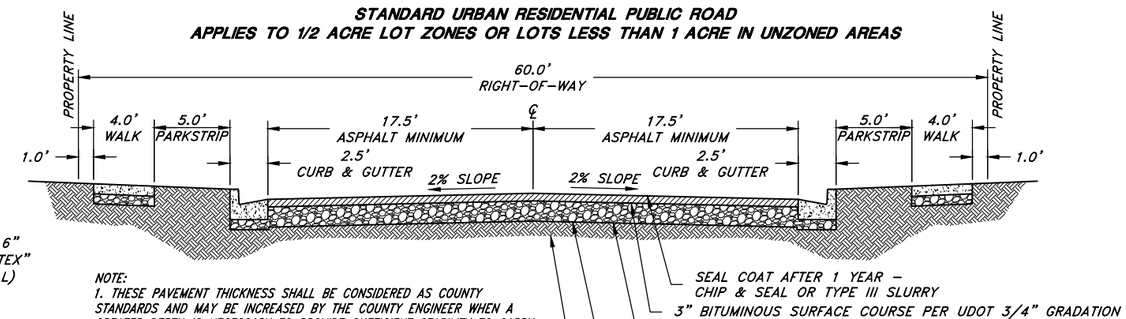

NOTE:
1. THESE PAVEMENT THICKNESS SHALL BE CONSIDERED AS COUNTY STANDARDS AND MAY BE INCREASED BY THE COUNTY ENGINEER WHEN A GREATER DEPTH IS NECESSARY TO PROVIDE SUFFICIENT STABILITY TO CARRY HS-20 LOADS. DESIGNER AND/OR DEVELOPER MAY SUBMIT AN ALTERNATIVE PAVEMENT DESIGN BASED ON A DETAILED SOILS ANALYSIS FOR APPROVAL BY THE COUNTY ENGINEER WHICH MAY MODIFY PAVEMENT THICKNESS, BUT IN NO CASE SHALL THE BITUMINOUS SURFACE COURSE BE LESS THAN 3" AND GRAVEL BASE COURSE LESS THAN 4" THICK.

#6 ROAD SECTION

STANDARD URBAN COLLECTOR PUBLIC ROAD
APPLIES TO 1/2 ACRE LOT ZONES OR LOTS LESS THAN 1 ACRE IN UNZONED AREAS

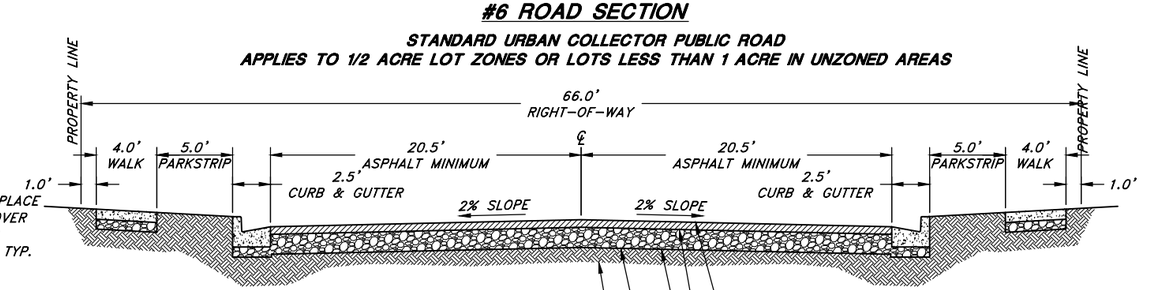

NOTE:
1. THESE PAVEMENT THICKNESS SHALL BE CONSIDERED AS COUNTY STANDARDS AND MAY BE INCREASED BY THE COUNTY ENGINEER WHEN A GREATER DEPTH IS NECESSARY TO PROVIDE SUFFICIENT STABILITY TO CARRY HS-20 LOADS. DESIGNER AND/OR DEVELOPER MAY SUBMIT AN ALTERNATIVE PAVEMENT DESIGN BASED ON A DETAILED SOILS ANALYSIS FOR APPROVAL BY THE COUNTY ENGINEER WHICH MAY MODIFY PAVEMENT THICKNESS, BUT IN NO CASE SHALL THE BITUMINOUS SURFACE COURSE BE LESS THAN 3" AND GRAVEL BASE COURSE LESS THAN 4" THICK.

PROJECT ENGINEER				SCALE: HORIZ: 1" = 10' VERT: 1" = 5'
DATE	REV.	DATE	APPR.	DESIGNED BWS / DRAWN TWE / CHECKED BWS

JONES & ASSOCIATES — CONSULTING ENGINEERS
1716 East 5600 South
South Ogden, Utah 84403 (801) 476-9767

BOX ELDER COUNTY
ROAD, STORM DRAIN, AND FENCING STANDARD DRAWINGS
ROADWAY SECTIONS

SHEET: 1 OF 1 SHEETS
0

#7 ROAD SECTION

STANDARD RURAL PAVED COLLECTOR ROAD
APPLIES TO AREAS 1 ACRE LOTS OR LARGER

SCALE:
1" = 10' HORIZ.
1" = 5' VERT.

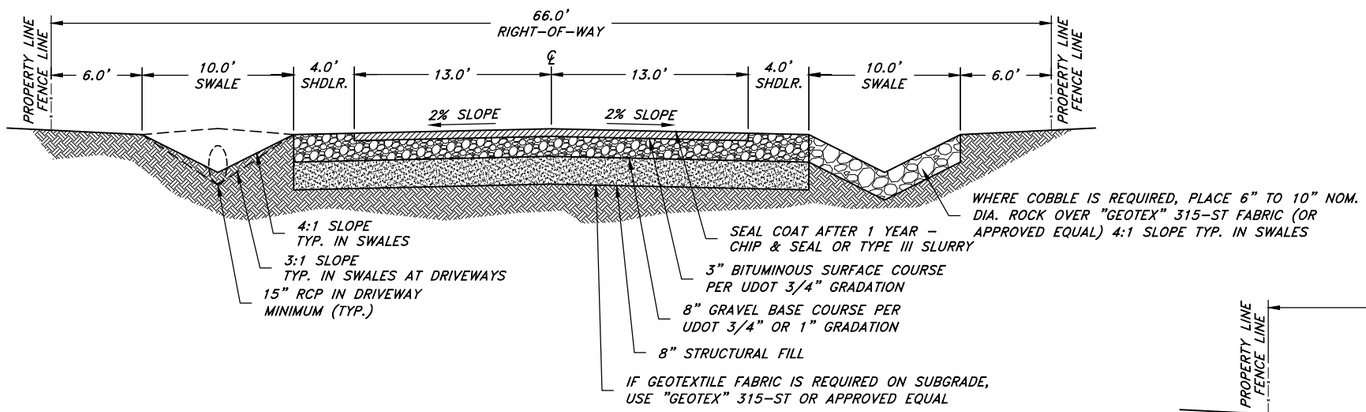

GENERAL NOTE:
1. ALL ROADSIDE DRAINAGE SWALES SHALL NOT BE FILLED IN AND SHALL BE MAINTAINED BY THE HOME OWNER.
2. MINIMUM COMPACTION FOR SUB-GRADE AND ROADBASE SHALL BE 95% AS DETERMINED BY AASHTO T-180.
3. COMPACTION FOR ASPHALT SHALL BE 95% AS DETERMINED BY ASTM D-1557 (MARSHAL TEST)
4. ALL SIDEWALKS, CURB & GUTTER, AND CROSS DRAINS SHALL BE CONSTRUCTED WITH 4000 PSI CONCRETE. MINIMUM SLOPE OF CURB & GUTTER SHALL BE 0.5%.

STANDARD SWALE

SCALE:
1" = 5' HORIZ AND VERT.

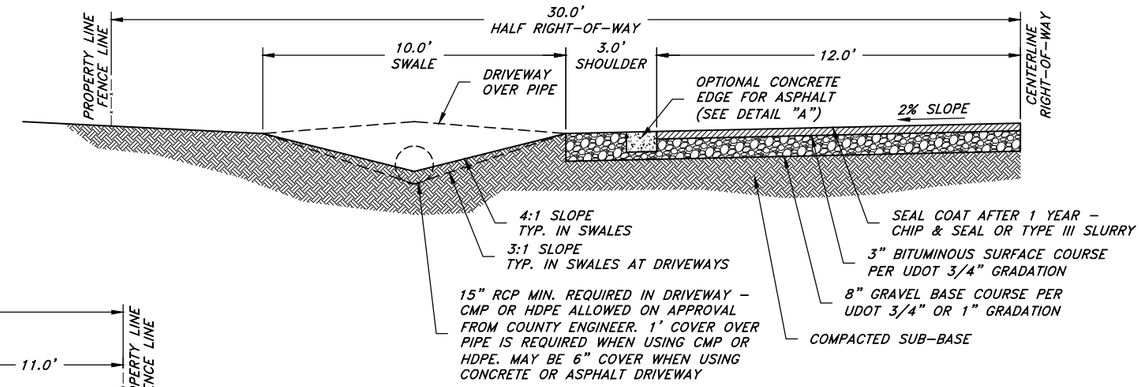

#8 ROAD SECTION

STANDARD RURAL PAVED ARTERIAL ROAD

SCALE:
1" = 10' HORIZ.
1" = 5' VERT.

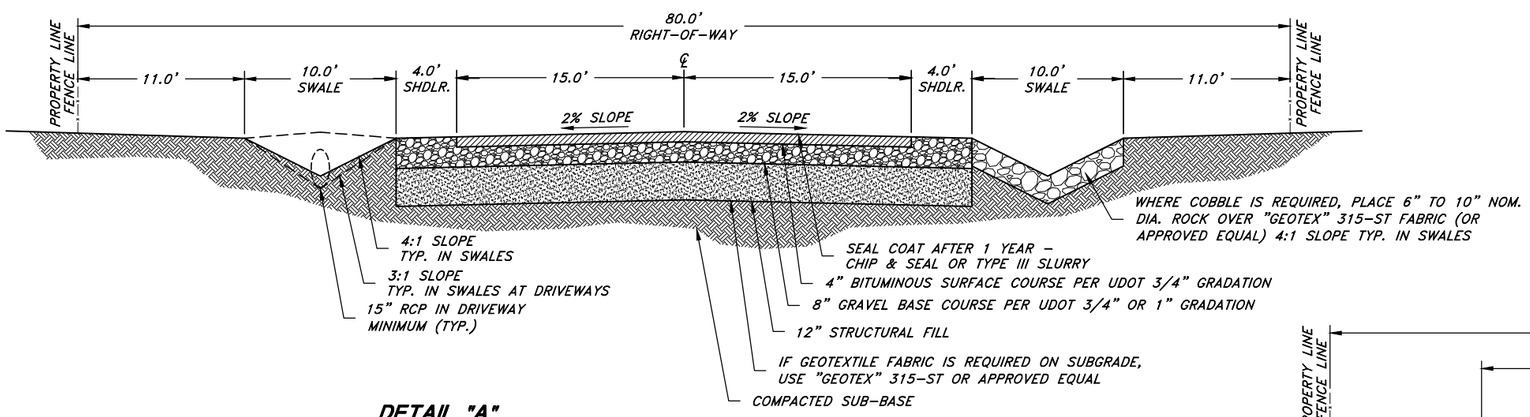

STANDARD COBBLE SWALE

SCALE:
1" = 5' HORIZ AND VERT.

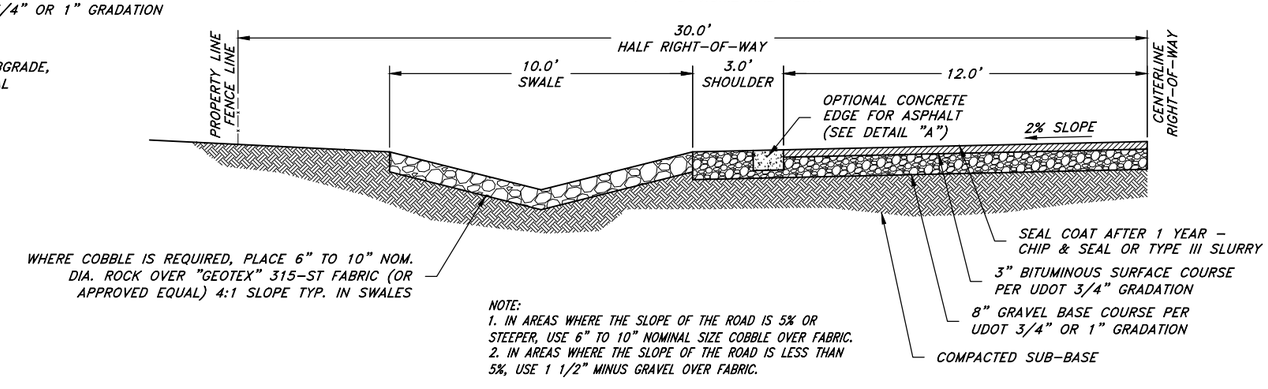

NOTE:
1. IN AREAS WHERE THE SLOPE OF THE ROAD IS 5% OR STEEPER, USE 6" TO 10" NOMINAL SIZE COBBLE OVER FABRIC.
2. IN AREAS WHERE THE SLOPE OF THE ROAD IS LESS THAN 5%, USE 1 1/2" MINUS GRAVEL OVER FABRIC.

DETAIL "A"

CONCRETE EDGE FOR ASPHALT

SCALE:
1" = 2' HORIZ AND VERT.

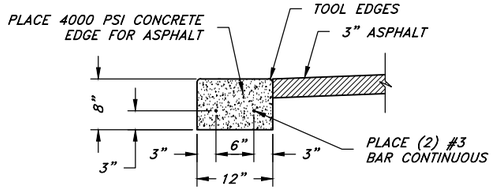

PROJECT ENGINEER				SCALE: AS NOTED	DESIGNED BWS	JONES & ASSOCIATES CONSULTING ENGINEERS	BOX ELDER COUNTY
DATE	REV.	DATE	APPR.		DRAWN TWE	1716 East 5600 South	ROAD, STORM DRAIN, AND FENCING STANDARD DRAWINGS
					CHECKED BWS	South Ogden, Utah 84403 (801) 476-9767	ROADWAY SECTIONS

SHEET: 2 OF 1 SHEETS
0

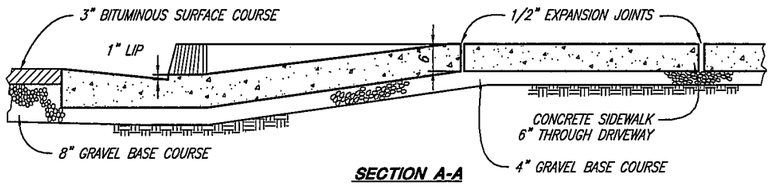

SECTION A-A

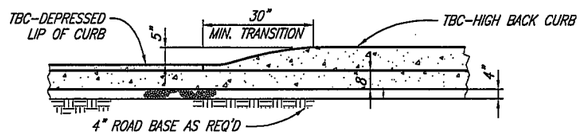

SECTION B-B

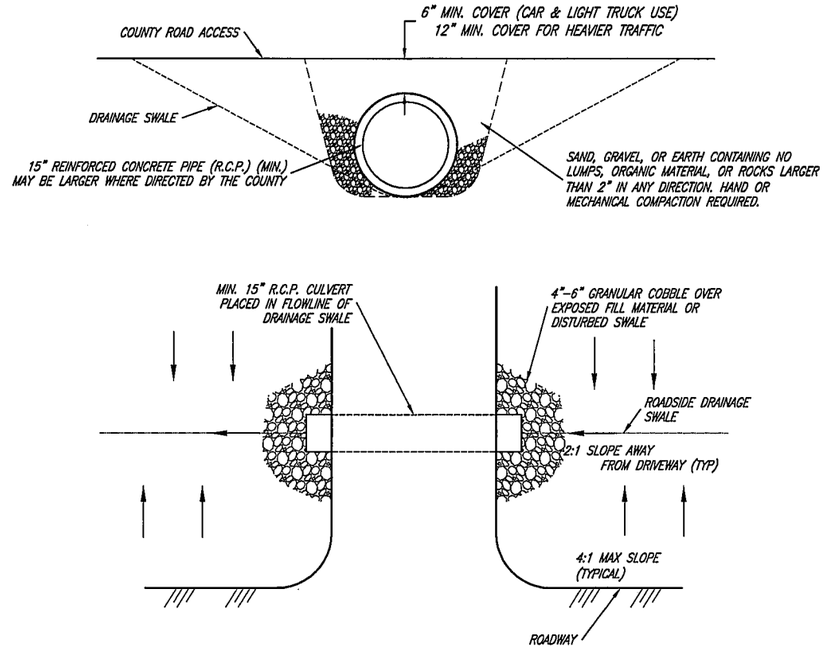

DRIVEWAY CULVERT DETAIL
(FOR ROADS WITHOUT CURB & GUTTER)

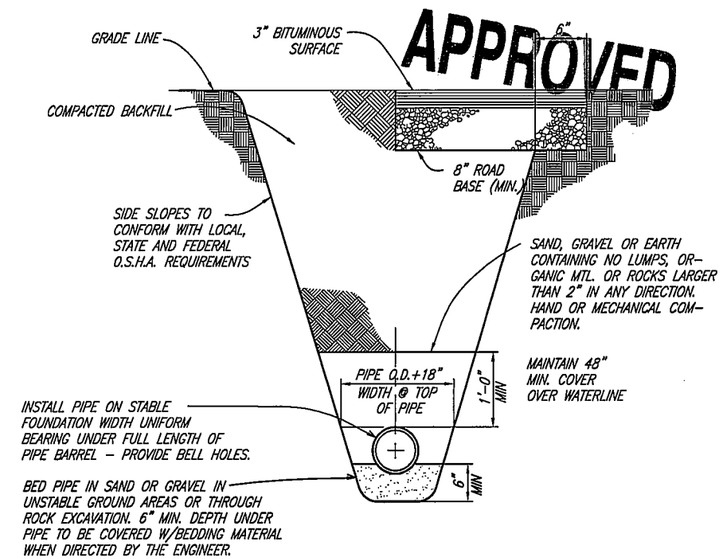

TYPICAL TRENCH SECTION

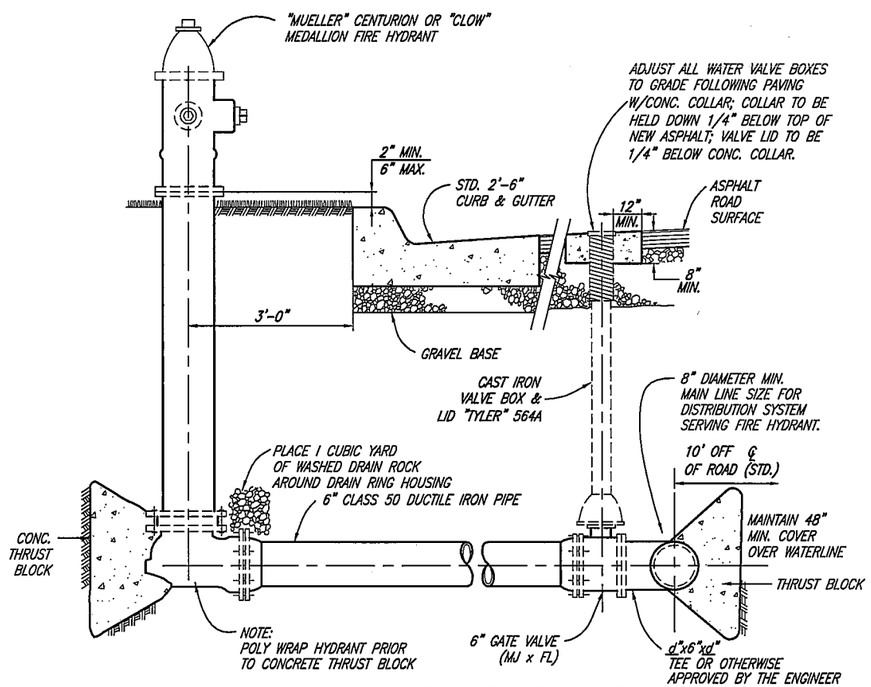

TYPICAL URBAN FIRE HYDRANT CONNECTION

NOTE: IN NEW SUBDIVISIONS WHERE FUTURE DRIVEWAY LOCATIONS ARE UNKNOWN, THE DRIVEWAY APPROACH SHALL BE MADE BY SAW CUTTING THE BACK OF THE EXISTING CURB TO THE REQUIRED DRIVEWAY WIDTH. ALL SAW CUTTING SHALL BE ACCOMPLISHED BY A COUNTY APPROVED LICENSED CONTRACTOR.

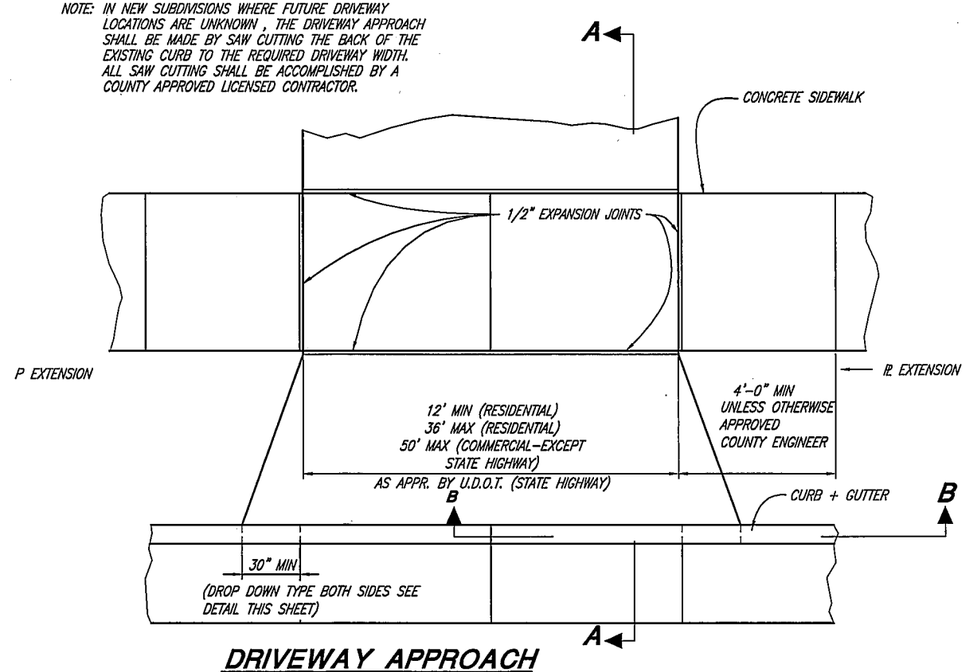

DRIVEWAY APPROACH
DROP DOWN STYLE

NOTE:
SCORE SIDEWALK ONE QUARTER OF SIDEWALK THICKNESS EVERY 4'-0". PLACE EXPANSION JOINTS EVERY 50'

PROJECT ENGINEER				SCALE: N.T.S.	DESIGNED BWS DRAWN SLS CHECKED KLJ	JONES & ASSOCIATES CONSULTING ENGINEERS 1716 East 5600 South South Ogden, Utah 84403 (801) 476-9767	BOX ELDER COUNTY ROAD, STORM DRAIN, AND FENCING STANDARD DRAWINGS DRIVEWAY DETAILS	SHEET: 4 OF 12 SHEETS
DATE	REV.	DATE	APPR.					

ROLL CURB SECTION
(SPECIAL APPROVAL REQUIRED)

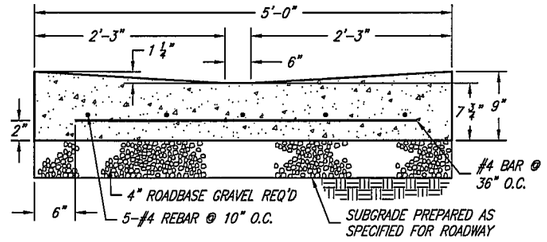

CROSS DRAIN SECTION

SIDEWALK SECTION

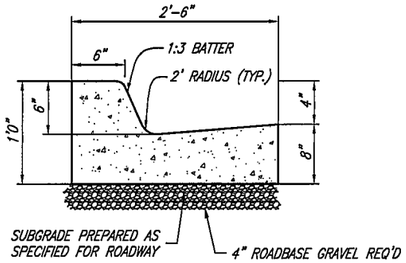

CURB & GUTTER SECTION

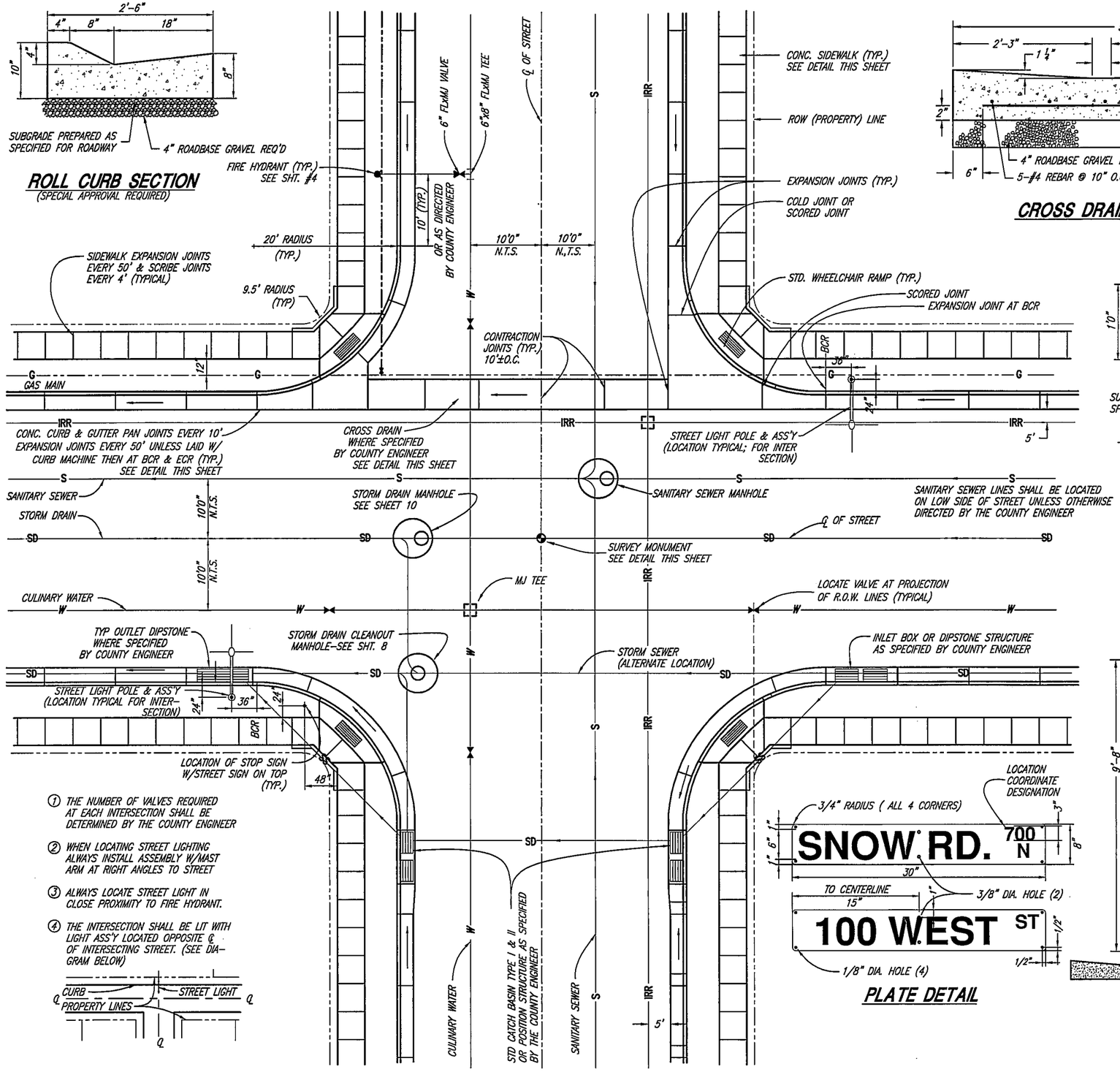

① THE NUMBER OF VALVES REQUIRED AT EACH INTERSECTION SHALL BE DETERMINED BY THE COUNTY ENGINEER

② WHEN LOCATING STREET LIGHTING ALWAYS INSTALL ASSEMBLY W/MAST ARM AT RIGHT ANGLES TO STREET

③ ALWAYS LOCATE STREET LIGHT IN CLOSE PROXIMITY TO FIRE HYDRANT.

④ THE INTERSECTION SHALL BE LIT WITH LIGHT ASS'Y LOCATED OPPOSITE ℄ OF INTERSECTING STREET. (SEE DIA-GRAM BELOW)

PLATE DETAIL

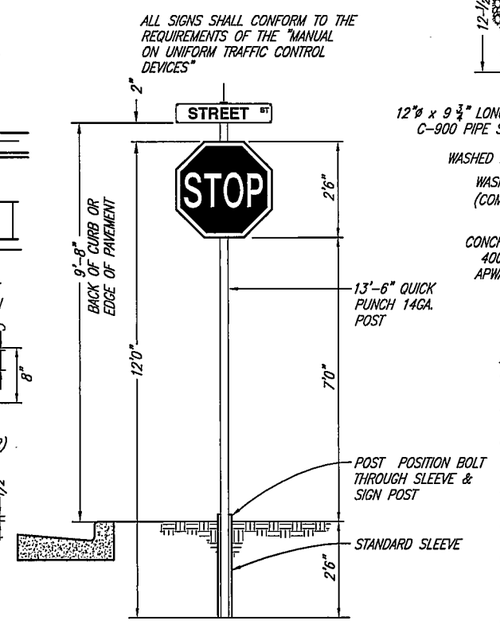

TRAFFIC SIGN & POST

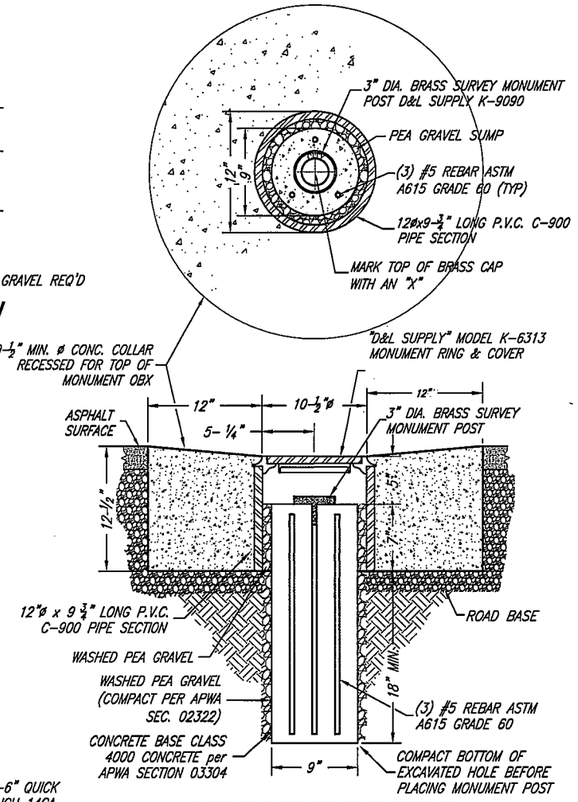

SURVEY MONUMENT DETAIL

TRAFFIC SIGN NOTES:

1. BACKGROUND SHALL BE GREEN, HIGH INTENSITY REFLECTIVE SHEETING 9FP-85 TYPE IIIA)
2. LEGEND SHALL BE WHITE LETTERS, HIGH INTENSITY REFLECTIVE SHEETING 9FP-85 IIIA)
3. SIGN BLANK SHALL BE 6081-T6 HEAT TREATED HIGH TENSILE DEGREASED ALUMINUM W/ALODINE 1200 FINISH-THICKNESS SHALL BE 0.10"
4. EACH SIGN SHALL CONSIST OF TWO PLATES RIVETED TOGETHER & MOUNTED AS SHOWN
5. SIGN ON PRIVATE ROADS SHALL MEET ALL SPECIFICATIONS FOR STANDARD SIGNS, EXCEPT BACKGROUND SHALL BE BLUE
6. ALL STREETS WITH NAMES MUST ALSO SHOW LOCATIONS COORDINATE DESIGNATION
7. ADDRESS COORDINATER MUST BE CONTACTED PRIOR TO MAKING SIGNS TO VERIFY PROPER NAMES AND COORDINATES
8. IF STREET HAS CONCRETE CURB, SIGN POST TO BE PLACED AT THE POINT OF CURVE (PC) OF THE INTERSECTION APPROACH CURB, OTHERWISE SIGN SHALL BE PLACED AT PC OF ASPHALT RADIUS APPROACH

APPROVED

PROJECT ENGINEER	REV.	DATE	APPR.	SCALE: N.T.S.	DESIGNED BWS DRAWN BEB CHECKED KLJ	JONES & ASSOCIATES CONSULTING ENGINEERS 1716 East 5600 South South Ogden, Utah 84403 (801) 476-9767	BOX ELDER COUNTY ROAD, STORM DRAIN, AND FENCING STANDARD DRAWINGS STANDARD STREET INTERSECTION DETAILS	SHEET: 5 OF 12 SHEETS
DATE								

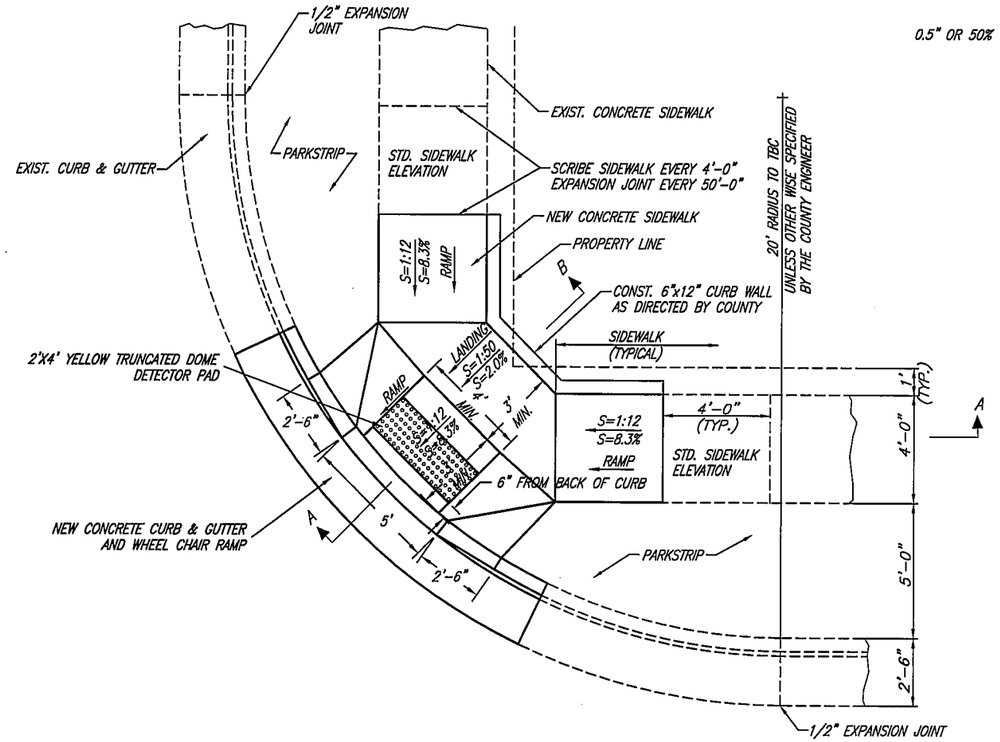

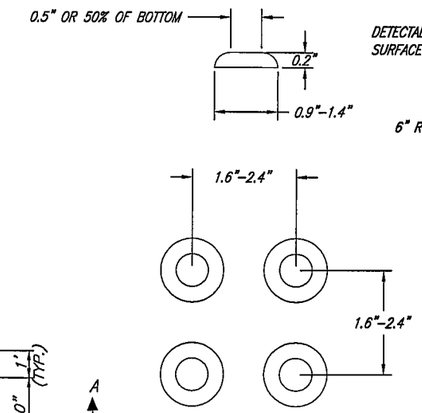

NOTES:
1. LOCATE DETECTABLE WARNINGS SO THAT THE EDGE NEAREST THE BACK OF CURB OR OTHER POTENTIAL HAZARD IS 6 INCHES FROM THE BACK OF CURB OR OTHER POTENTIAL HAZARD. PROVIDE 2-FOOT MINIMUM DEPTH.

SEE FIGURE FOR TRUNCATED DOME SIZE AND SPACING DIMENSION DETAILS.

TRUNCATED DOME DETAIL

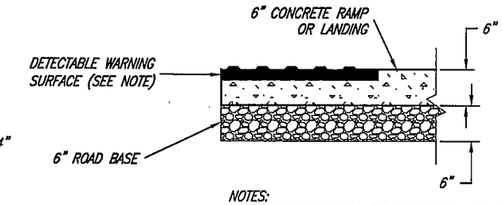

NOTES:
1. INSTALLATION SHALL BE IN ACCORDANCE WITH MANUFACTURER'S RECOMMENDATIONS.

TILE DETAIL

GENERAL NOTES:
A. THE DETECTABLE WARNING SURFACE DOMES SHALL BE ORIENTED SUCH THAT THE ROWS ARE PARALLEL WITH THE DIRECTION OF PEDESTRIAN TRAVEL TO THE RAMP ON THE OPPOSITE SIDE OF THE STREET.

B. THE COLOR FOR THE DETECTABLE WARNING SURFACE SHALL BE YELLOW IN COLOR AS APPROVED BY THE COUNTY OR AUTHORIZED REPRESENTATIVE.

C. WHEN A DETECTABLE WARNING SURFACE DOME IS CUT, THE REMAINING PORTION OF THE DOME SHALL BE BEVELED TO A MAXIMUM SLOPE OF 1:2.

APPROVED

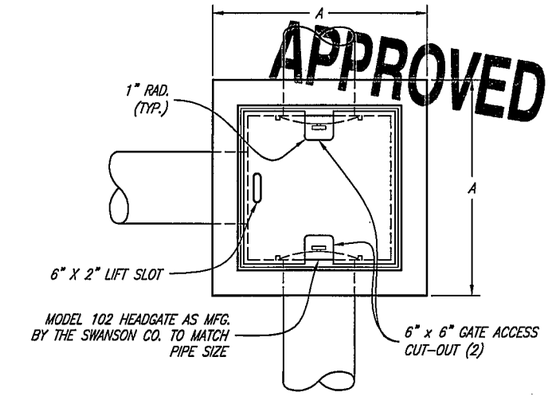

PLAN

DIMENSION	TYPE I	TYPE II
A	3'-0"	4'-0"
B	2'-1 1/2"	3'-1 1/2"
C	2'-1"	3'-1"
D	2'-0"	3'-0"

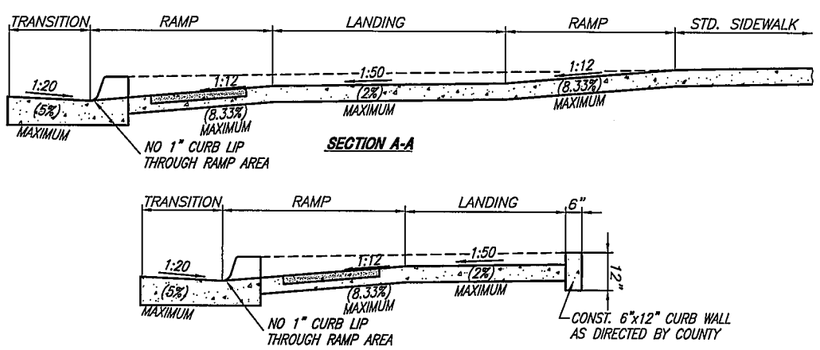

TYPICAL WHEEL CHAIR RAMP

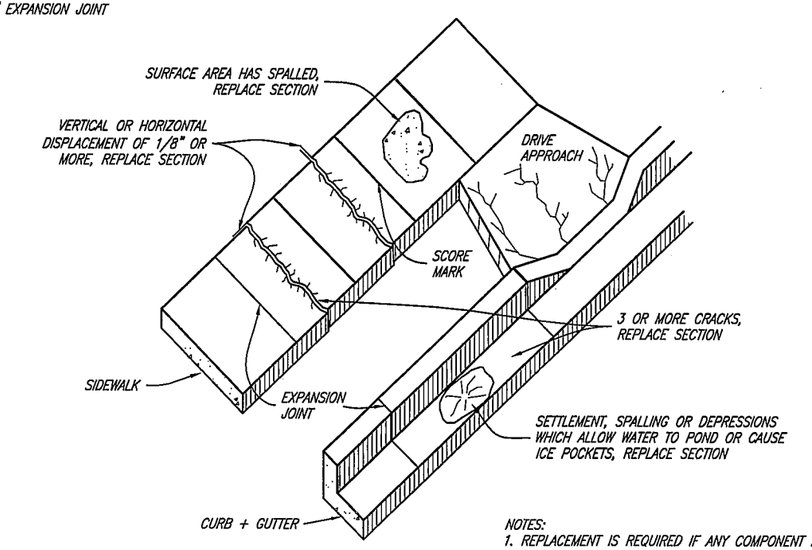

NOTES:
1. REPLACEMENT IS REQUIRED IF ANY COMPONENT HAS ONE OR MORE OF THE CONDITIONS SHOWN ABOVE.
2. ANYTIME CONCRETE IS CUT TO REPLACE A DEFECTIVE COMPONENT, THE CUT SHOULD EXTEND COMPLETELY THROUGH THE PIECE BEING REPLACED.

DEFECTIVE CONCRETE REPLACEMENT CRITERIA

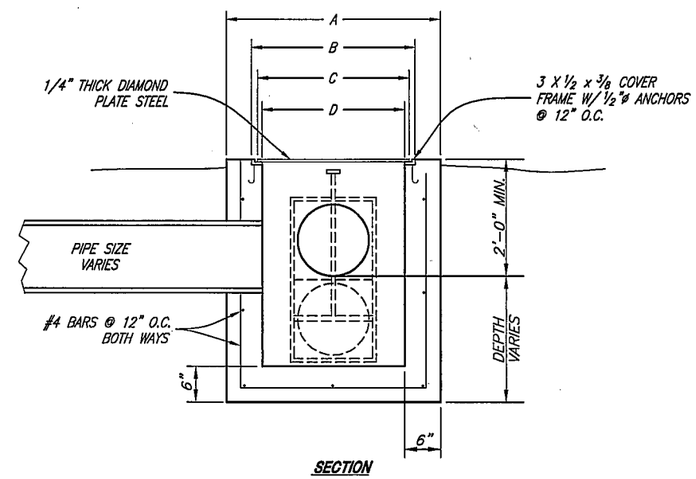

SECTION

NOTES:
1. PIPE MATERIALS & SIZE SHALL BE APPROVED BY IRRIGATION COMPANY.
2. HORIZONTAL & VERTICAL ALIGNMENT TO BE APPROVED BY COUNTY & IRRIGATION COMPANY.

IRRIGATION BOX

PROJECT ENGINEER				SCALE: N.T.S.	DESIGNED BWS DRAWN BEB CHECKED KLJ
DATE	REV.	DATE	APPR.		

JONES & ASSOCIATES CONSULTING ENGINEERS
1716 East 5600 South
South Ogden, Utah 84403 (801) 476-9767

BOX ELDER COUNTY
ROAD, STORM DRAIN, AND FENCING STANDARD DRAWINGS
TYPICAL WHEELCHAIR RAMP

SHEET: 6 OF 12 SHEETS

APPROVED

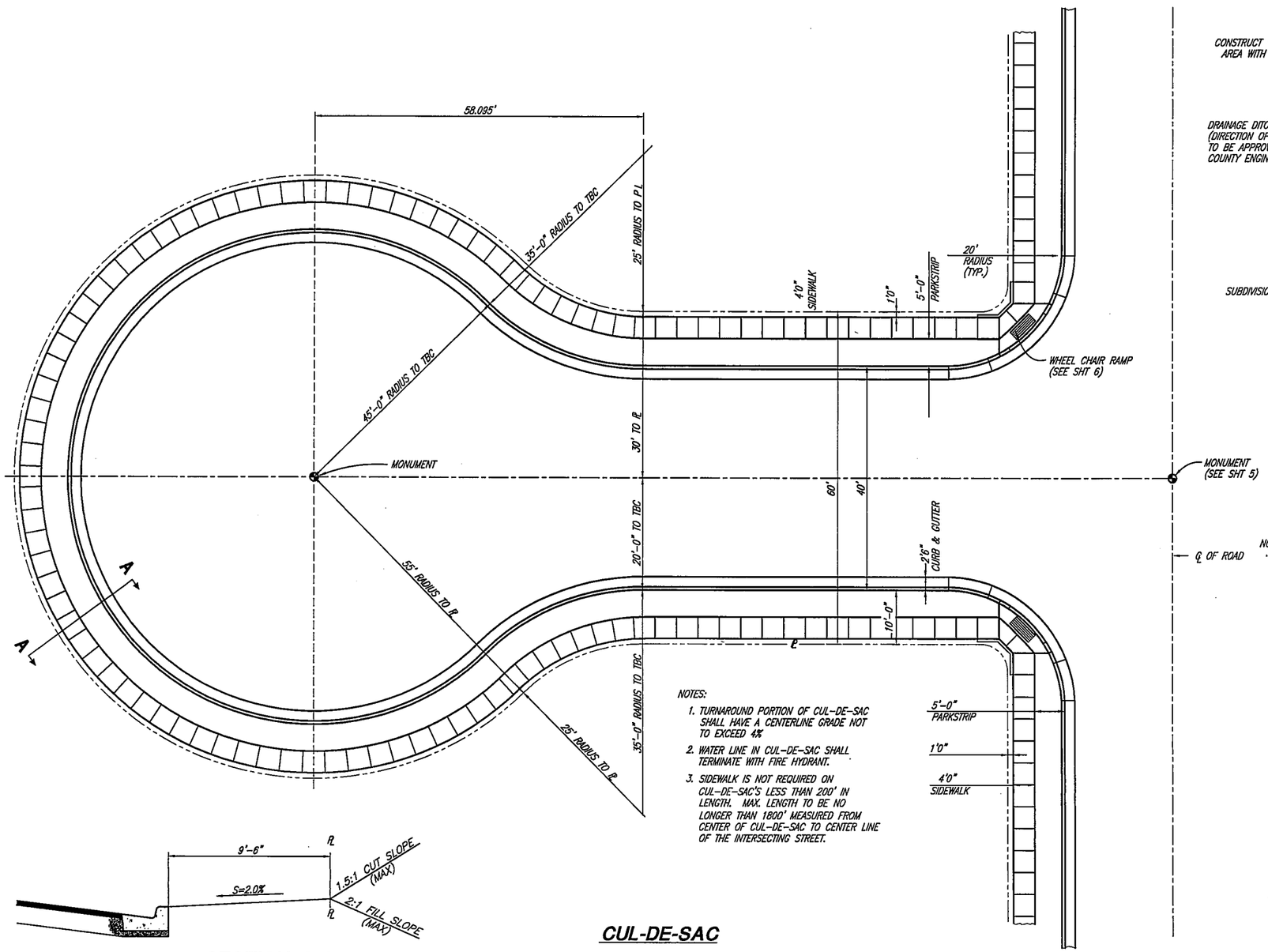

NOTES:

1. TURNAROUND PORTION OF CUL-DE-SAC SHALL HAVE A CENTERLINE GRADE NOT TO EXCEED 4%
2. WATER LINE IN CUL-DE-SAC SHALL TERMINATE WITH FIRE HYDRANT.
3. SIDEWALK IS NOT REQUIRED ON CUL-DE-SAC'S LESS THAN 200' IN LENGTH. MAX. LENGTH TO BE NO LONGER THAN 1800' MEASURED FROM CENTER OF CUL-DE-SAC TO CENTER LINE OF THE INTERSECTING STREET.

CUL-DE-SAC

SECTION A-A

REQUIRED GRADING BETWEEN TBC AND PROPERTY LINE

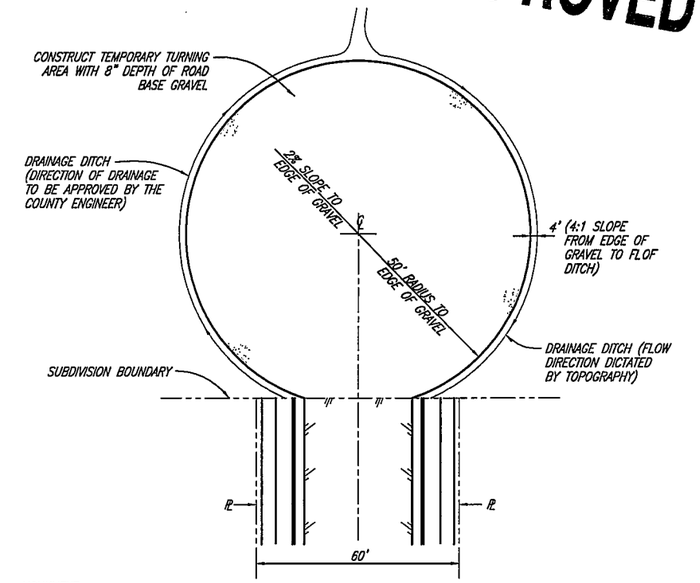

TEMPORARY TURNAROUND

℄ OF ROAD

NOTE: WHEN TURNAROUND CANNOT BE CONSTRUCTED OUTSIDE OF THE SUBDIVISION, IT SHALL BE LOCATED ON A PORTION OF THE SUBDIVISION LOTS (AS NEEDED) WITH THE SUBDIVIDER PLACING IN ESCROW AN AMOUNT OF MONEY SUFFICIENT TO COMPLETE THE STREET IMPROVEMENTS TO THE SUBDIVISION BOUNDARY. THESE FUNDS WILL BE USED AT SUCH TIME THE STREET IS EXTENDED.

NOTE: THE CIRCULAR CUL-DE-SAC LAYOUT SHOWN ON THIS SHEET IS TO BE CONSIDERED AS THE COUNTY STANDARD DESIGN. OTHER ALTERNATE DESIGN MAY BE CONSIDERED AS APPROVED BY THE COUNTY ENGINEER.

PROJECT ENGINEER	REV.	DATE	APPR.	SCALE: N.T.S.	DESIGNED BWS DRAWN BEB CHECKED KLJ	JONES & ASSOCIATES CONSULTING ENGINEERS 1716 East 5600 South South Ogden, Utah 84403 (801) 476-9767	BOX ELDER COUNTY ROAD, STORM DRAIN, AND FENCING STANDARD DRAWINGS CUL-DE-SAC DETAILS	SHEET: 7 OF 12 SHEETS
DATE								

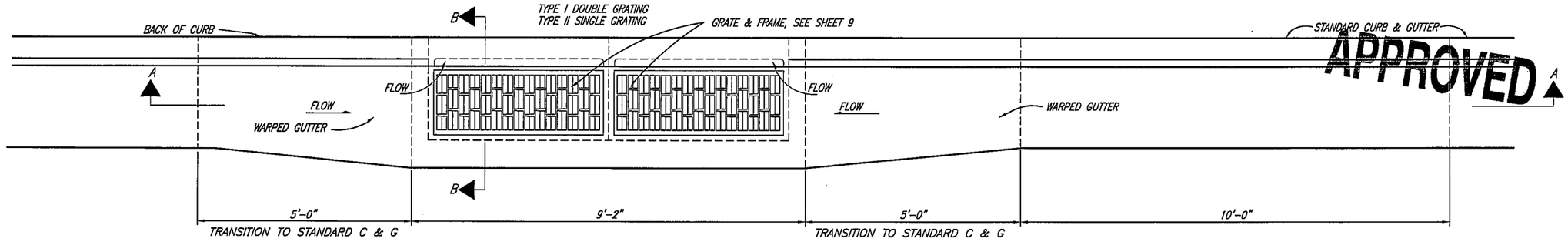

PLAN

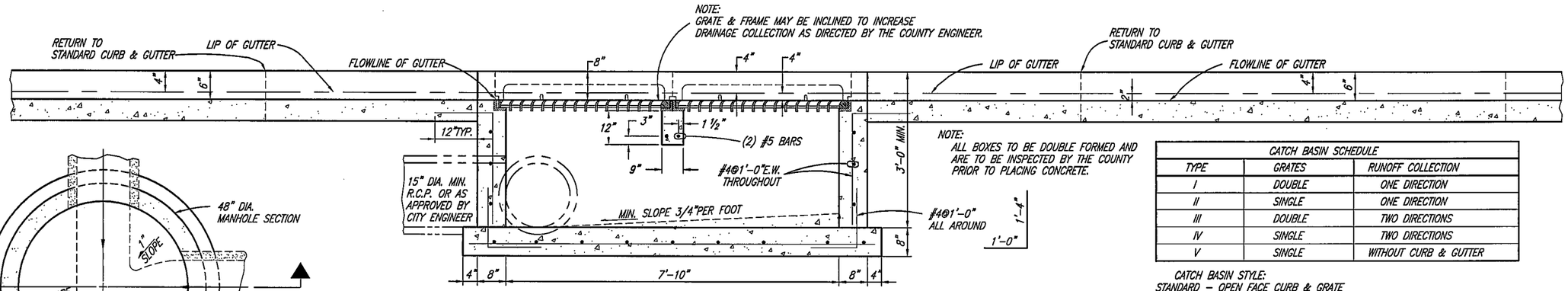

NOTE:
ALL BOXES TO BE DOUBLE FORMED AND ARE TO BE INSPECTED BY THE COUNTY PRIOR TO PLACING CONCRETE.

SECTION A-A

TYPE I CATCH BASIN

CATCH BASIN SCHEDULE		
TYPE	GRATES	RUNOFF COLLECTION
I	DOUBLE	ONE DIRECTION
II	SINGLE	ONE DIRECTION
III	DOUBLE	TWO DIRECTIONS
IV	SINGLE	TWO DIRECTIONS
V	SINGLE	WITHOUT CURB & GUTTER

CATCH BASIN STYLE:
STANDARD – OPEN FACE CURB & GRATE
ALTERNATE 1 – STD. CURB & GRATE
ALTERNATE 2 – PVC CATCH BASIN

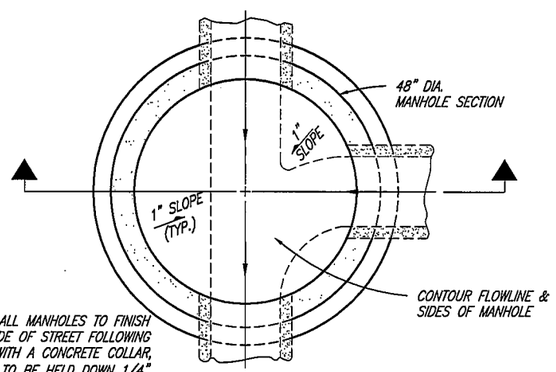

RAISE ALL MANHOLES TO FINISH GRADE OF STREET FOLLOWING PAVING WITH A CONCRETE COLLAR. COLLAR TO BE HELD DOWN 1/4" BELOW TOP OF NEW ASPHALT PAVING. MANHOLE LID TO BE 1/4" BELOW CONC. COLLAR.

PLAN

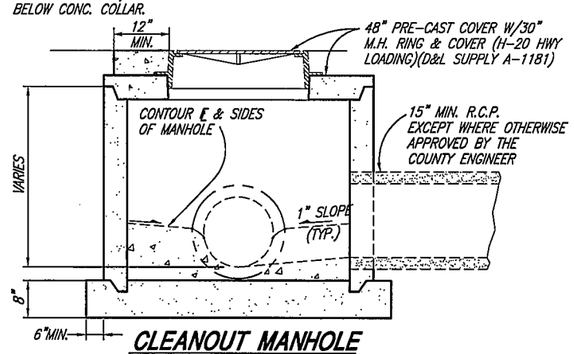

CLEANOUT MANHOLE

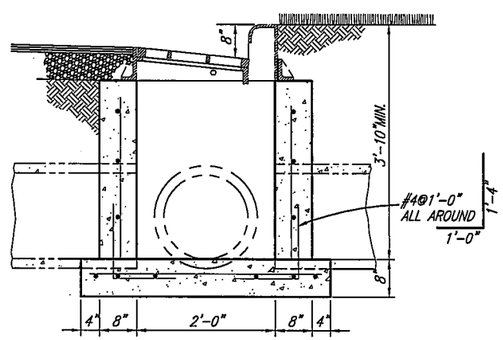

SECTION B-B

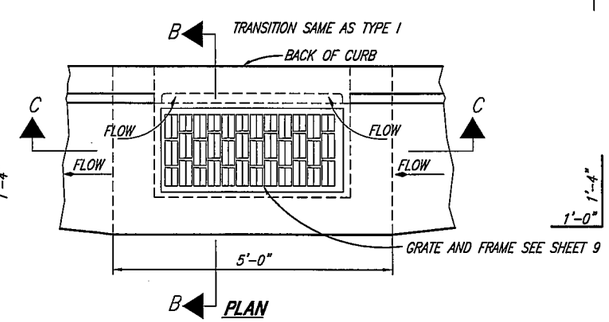

PLAN

TYPE II CATCH BASIN

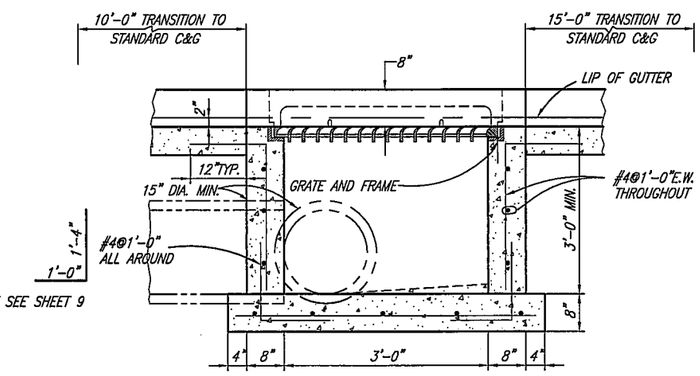

SECTION C-C

PROJECT ENGINEER	REV.	DATE	APPR.	SCALE: N.T.S.	DESIGNED BWS DRAWN BEB CHECKED KLJ	JONES & ASSOCIATES CONSULTING ENGINEERS 1716 East 5600 South South Ogden, Utah 84403 (801) 476-9767	BOX ELDER COUNTY ROAD, STORM DRAIN, AND FENCING STANDARD DRAWINGS CATCH BASINS & STORM DRAIN CLEANOUT MANHOLE DETAILS	SHEET: 8 OF 12 SHEETS
DATE								

APPROVED

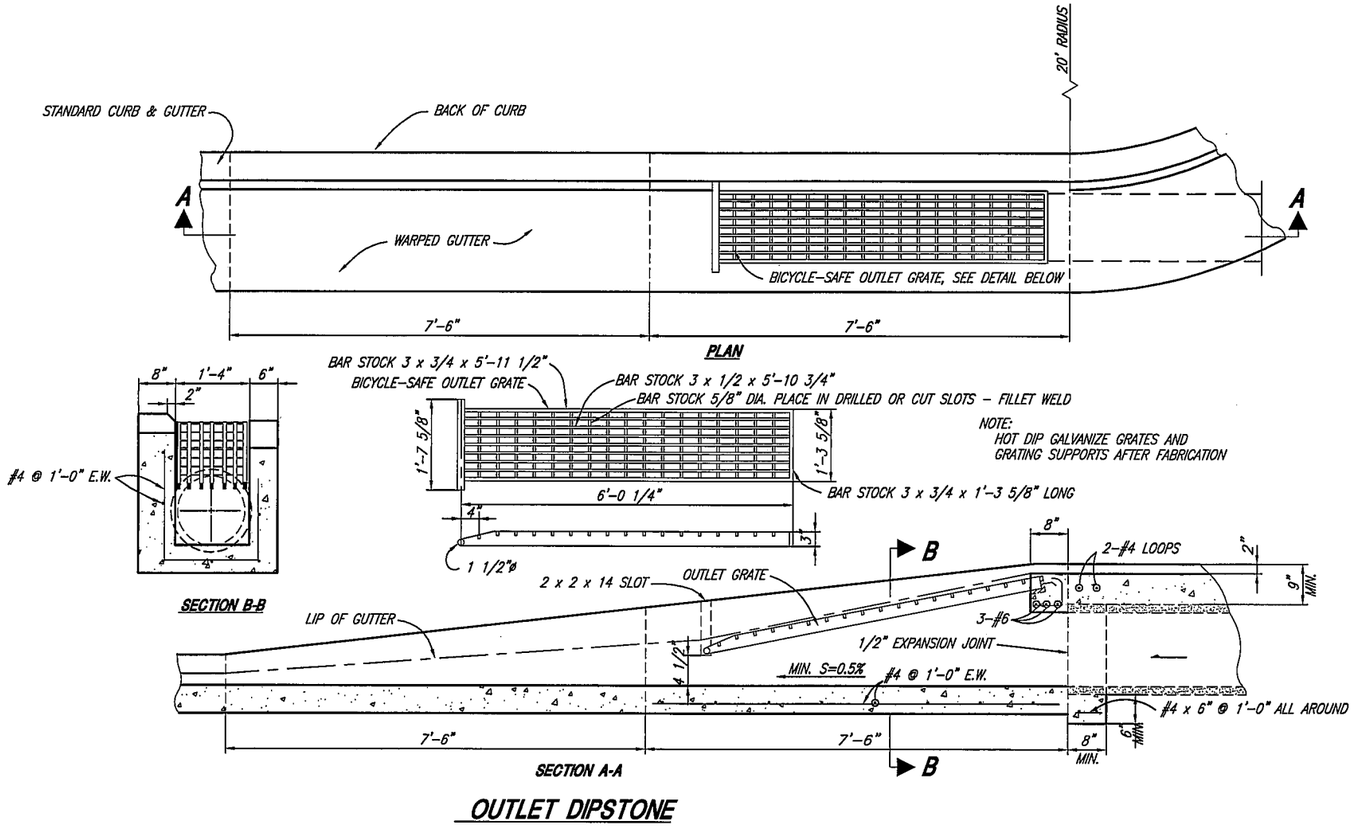

OUTLET DIPSTONE

NOTES:
ALL BOXES ARE TO BE DOUBLE FORMED AND ARE TO BE INSPECTED BY THE CITY PRIOR TO PLACING CONCRETE.

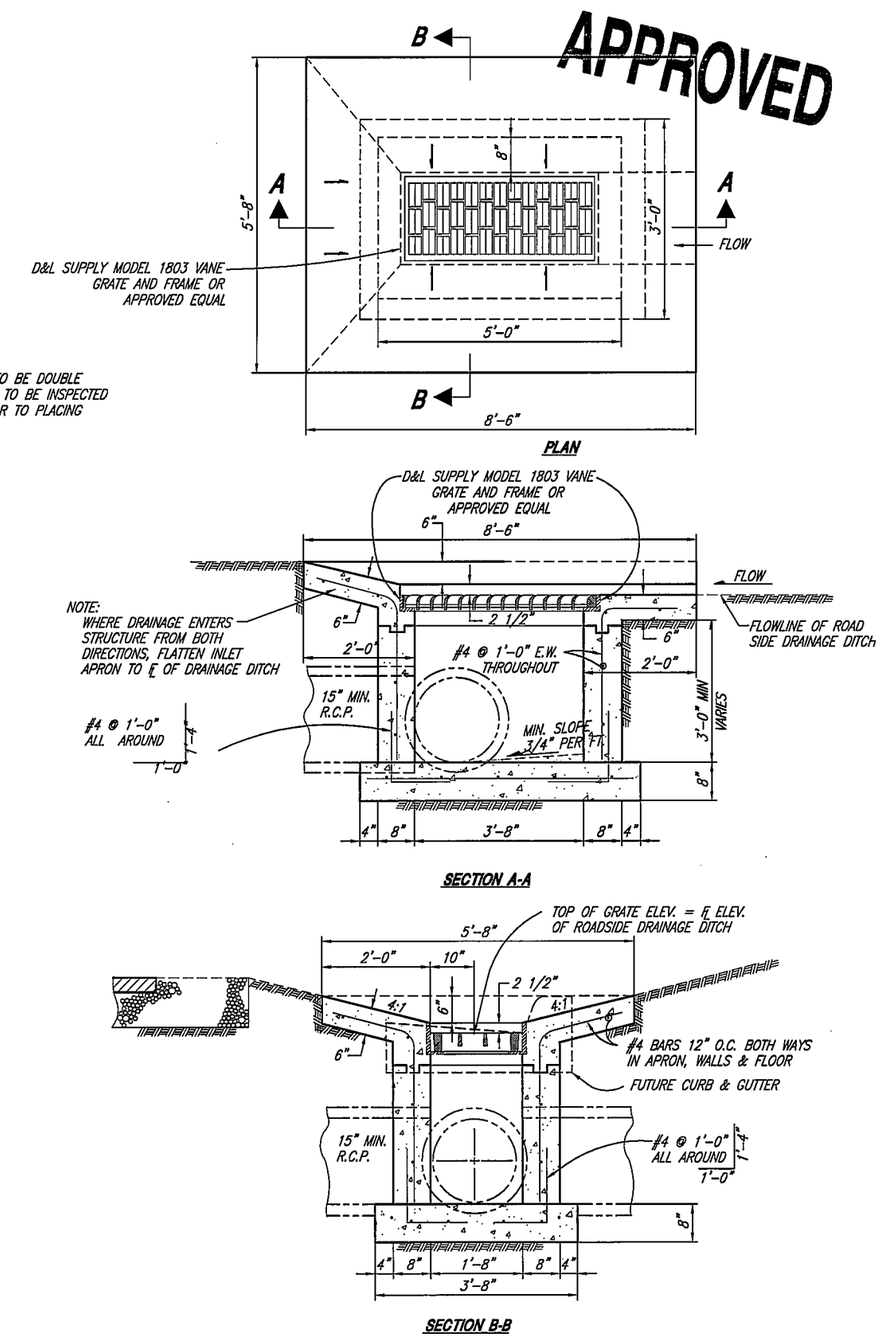

TYPE V CATCH BASIN

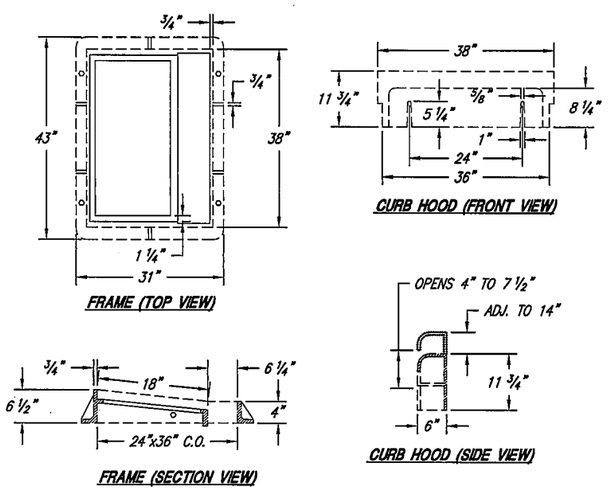

FRAME AND REINFORCED CURB HOOD

D&L SUPPLY I-3516-R2 AND I-3516-06

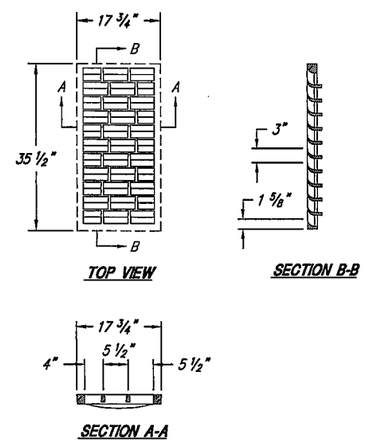

TYPE "L" GRATE (STD.)

D&L SUPPLY I-3517-02

PROJECT ENGINEER				SCALE: N.T.S.	DESIGNED BWS DRAWN BEB CHECKED KLJ	JONES & ASSOCIATES CONSULTING ENGINEERS 1716 East 5600 South South Ogden, Utah 84403 (801) 476-9767	BOX ELDER COUNTY ROAD, STORM DRAIN, AND FENCING STANDARD DRAWINGS TYPE V CATCH BASIN & OUTLET DIPSTONE DETAILS	SHEET: 9 OF 12 SHEETS
DATE	REV.	DATE	APPR.					

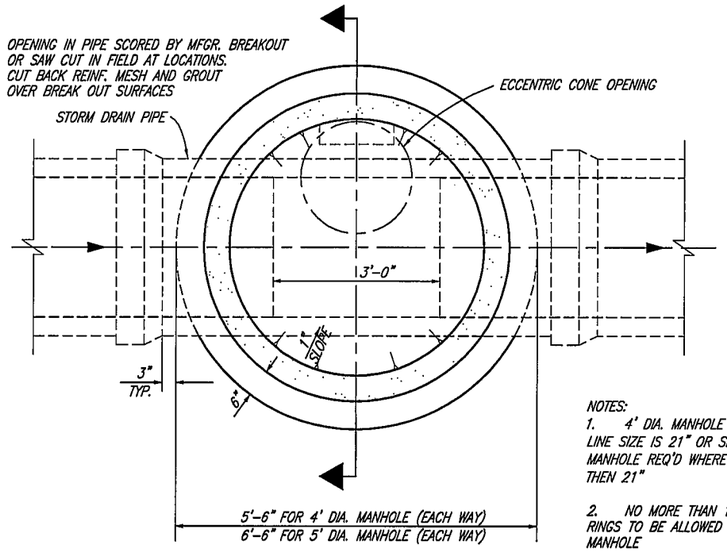

NOTES:
1. 4' DIA. MANHOLE REQ'D WHERE LINE SIZE IS 21" OR SMALLER, 5' DIA. MANHOLE REQ'D WHERE LINE SIZE IS LARGER THEN 21"

2. NO MORE THAN 12" OF GRADE RINGS TO BE ALLOWED ON ANY MANHOLE

TYPICAL LINE MANHOLE

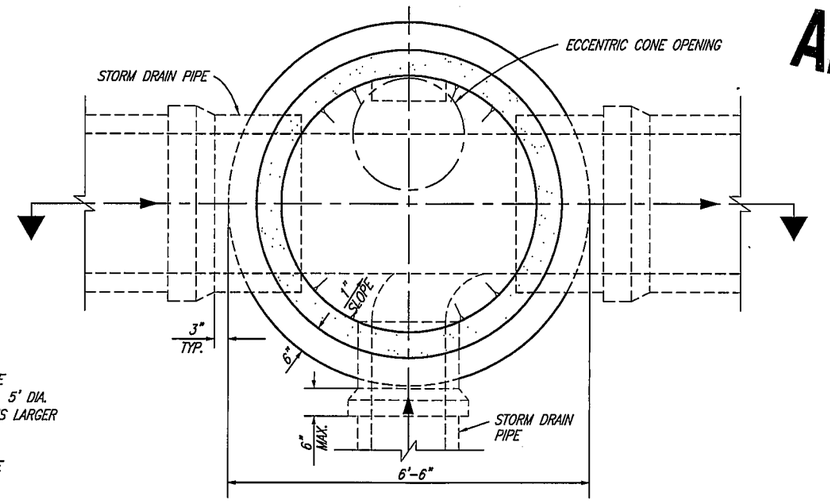

TYPICAL JUNCTION MANHOLE

APPROVED

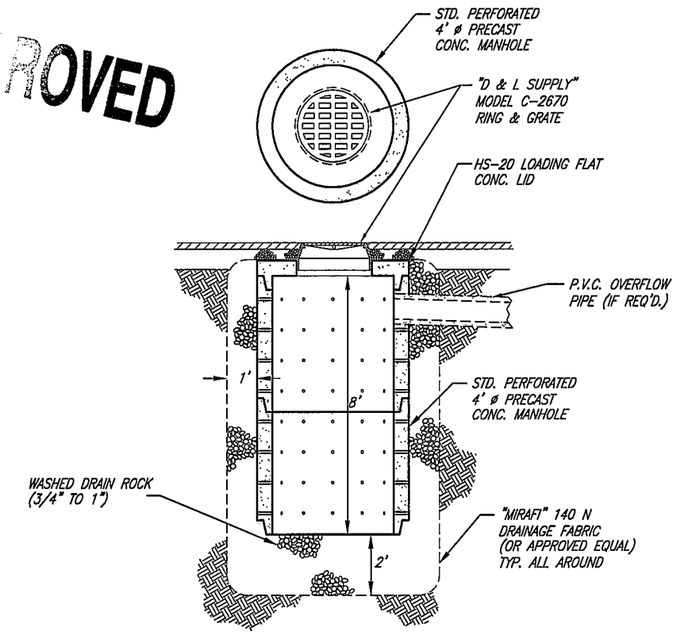

TYPICAL SUMP DETAIL

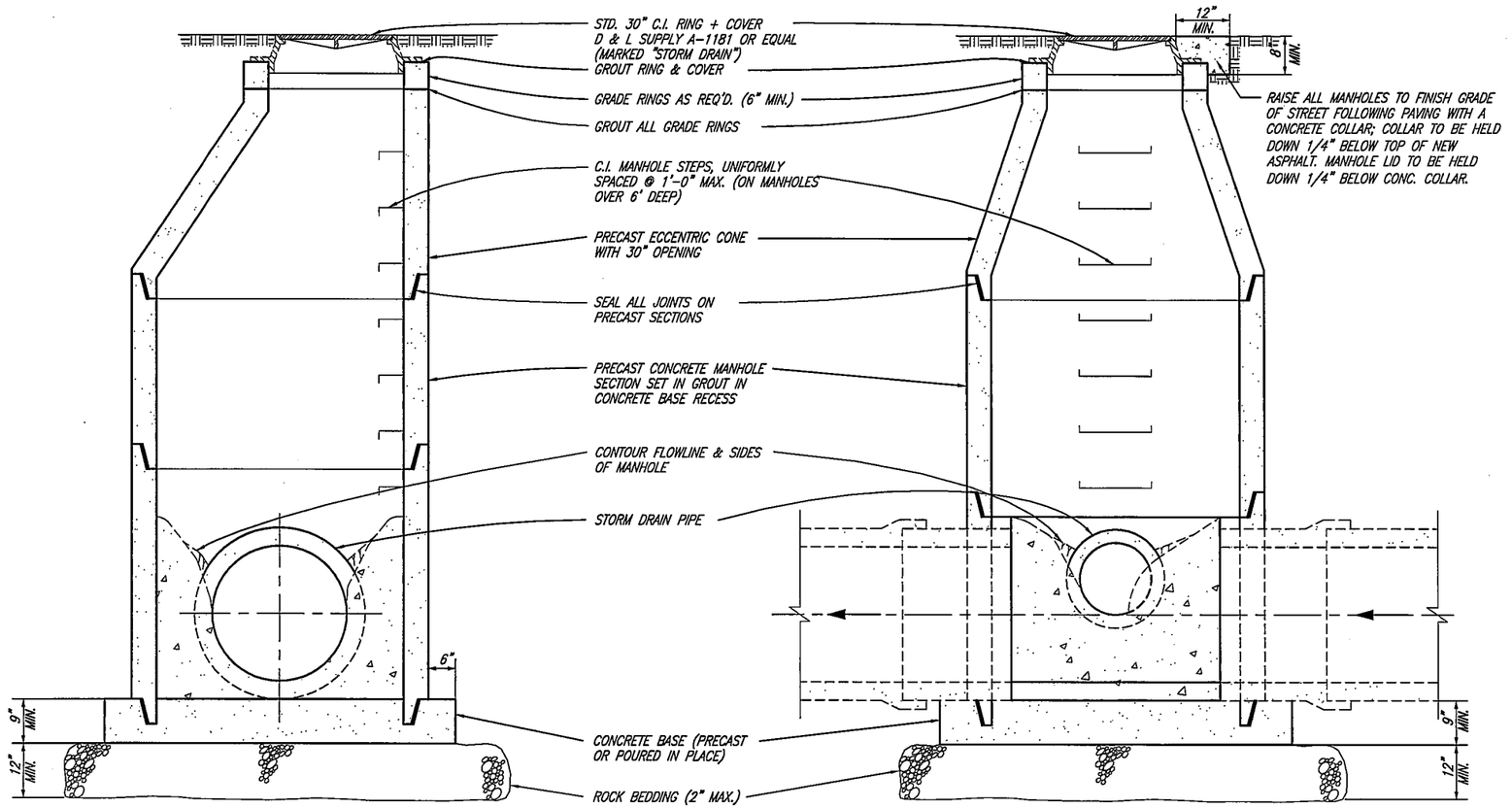

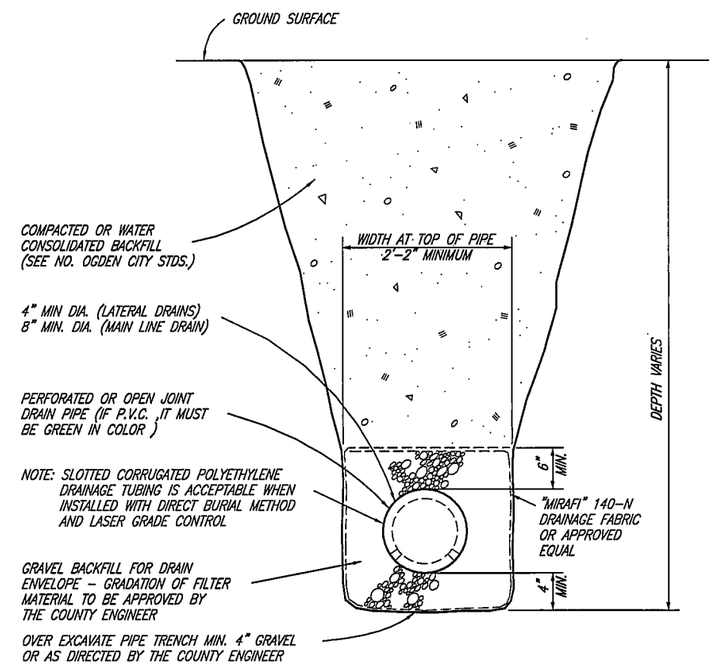

PROJECT ENGINEER	REV.	DATE	APPR.	SCALE: N.T.S.	DESIGNED BWS DRAWN BEB CHECKED KLJ	JA JONES & ASSOCIATES CONSULTING ENGINEERS 1716 East 5600 South South Ogden, Utah 84403 (801) 476-9767	BOX ELDER COUNTY ROAD, STORM DRAIN, AND FENCING STANDARD DRAWINGS STORM DRAIN M.H. & SUBSURFACE DRAIN DETAILS	SHEET: 10 OF 12 SHEETS
DATE								

APPROVED

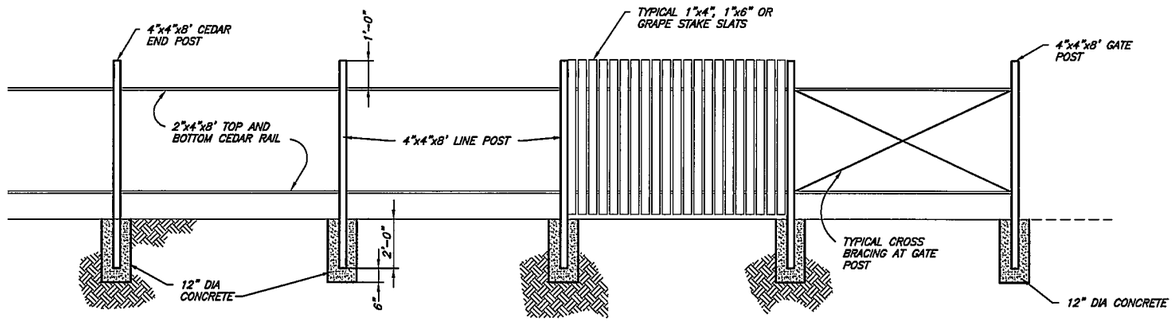

TYPICAL WOOD FENCE

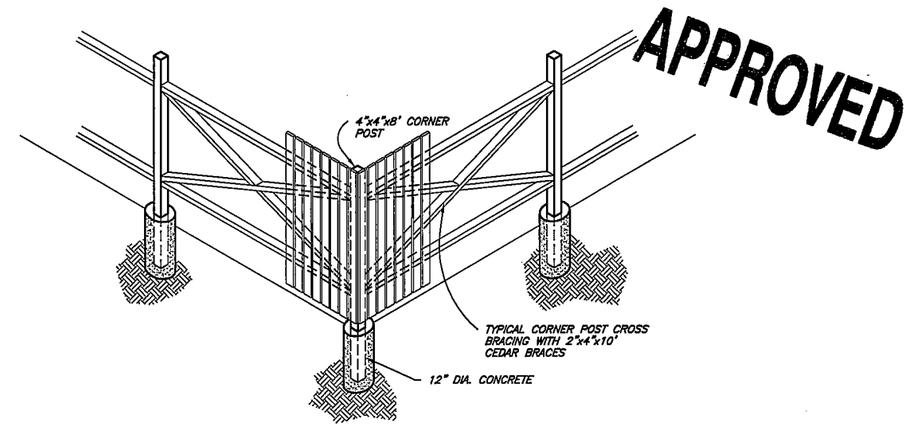

CORNER POST DETAIL

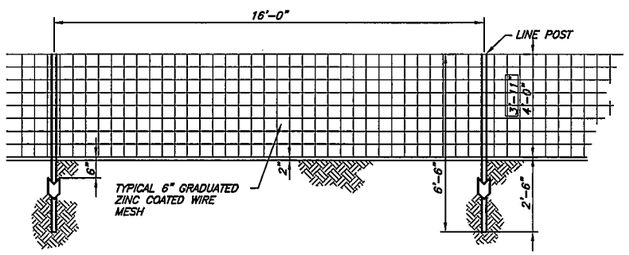

TYPICAL WIRE FENCE

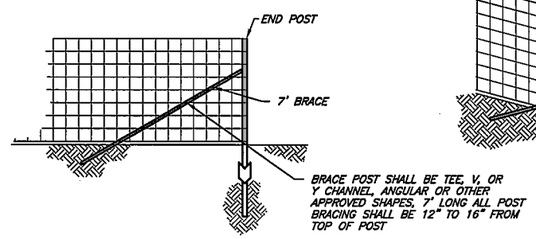

END POST BRACING DETAIL

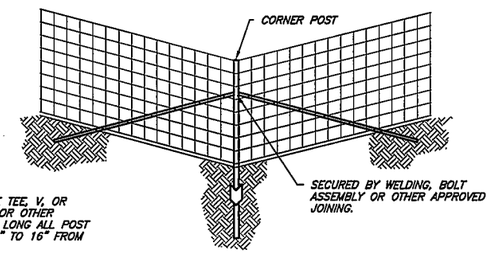

CORNER POST DETAIL

NOTE:
THIS SHEET SPECIFIES VARIOUS FENCING TYPES TO BE CONSTRUCTED WHEN CALLED FOR BY THE COUNTY ENGINEER.

GATES			
GATE POST AND GATE FRAMES			
HEIGHT	GATE OPENING	GATE POST	GATE FRAME
6 FEET AND OVER	SINGLE TO 6' OR DOUBLE TO 12'	2 5/8"	1 1/2"
	SINGLE OVER 6' TO 13' OR DOUBLE OVER 12' TO 24'	3 1/2"	
	SINGLE OVER 13' TO 18' OR DOUBLE OVER 24' TO 36'	6"	
	SINGLE TO 18' OR DOUBLE OVER 36'	8"	

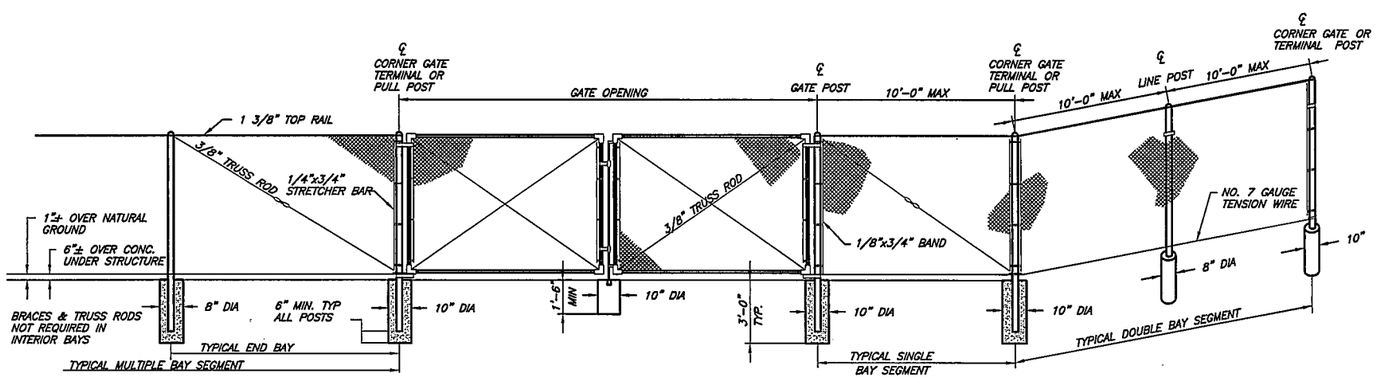

TYPICAL CHAIN LINK FENCE

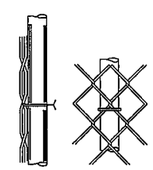

TYPICAL TIE DETAIL

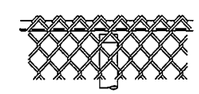

KNUCKLED SELVAGE

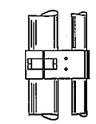

TOP GATE HINGE

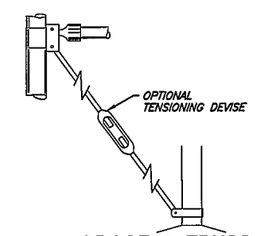

BRACE & TRUSS CONNECTIONS

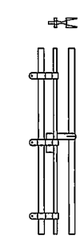

DROP ROD ASSEMBLY

NOTES:

1. ALL FABRIC SHALL BE 6' HIGH CHAIN LINK OF 2" GALVANIZED MESH OF 9 GAUGE.
2. ALL STEEL PIPE MEMBERS SHALL CONFORM TO THE REQUIREMENTS OF A.S.T.M. DESIGNATION A-120,SCHEDULE 40, HOT DIPPED ZINC COATED STEEL PIPE.
3. ALL POST SHALL BE SET IN CONCRETE AND SHALL BE TOPPED WITH BALL TYPE OR OTHER APPROVED ORNAMENT.
4. ALL END, CORNER OR PULL POST SHALL BE 9 FEET IN LENGTH WITH A MINIMUM DIAMETER OF 2 7/8 INCHES: ALL LINE POST SHALL BE 8 FEET 8 INCHES IN LENGTH WITH A MINIMUM DIAMETER OF 1 7/8 INCHES.

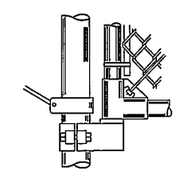

BOTTOM GATE HINGE

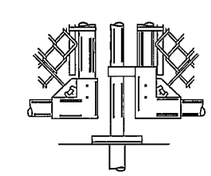

CENTER GATE STOP

PROJECT ENGINEER	REV.	DATE	APPR.	
DATE				

SCALE: N.T.S.

DESIGNED BWS
DRAWN BEB
CHECKED KLJ

JA JONES & ASSOCIATES
CONSULTING ENGINEERS
1716 East 5600 South
South Ogden, Utah 84403 (801) 476-9767

BOX ELDER COUNTY
ROAD, STORM DRAIN, AND FENCING STANDARD DRAWINGS

FENCING STANDARD DETAILS

SHEET: 11 OF 12 SHEETS

APPROVED

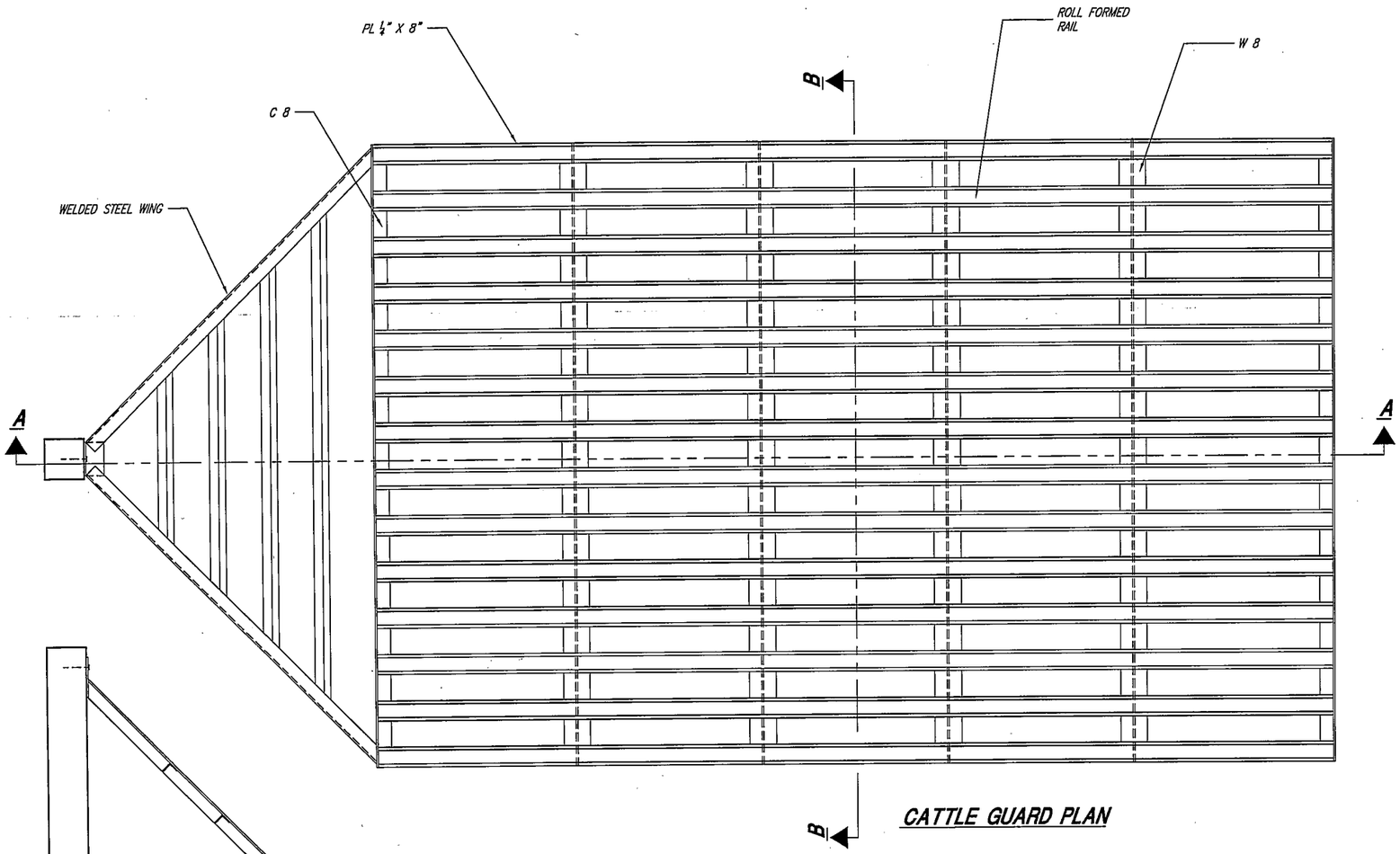

CATTLE GUARD PLAN

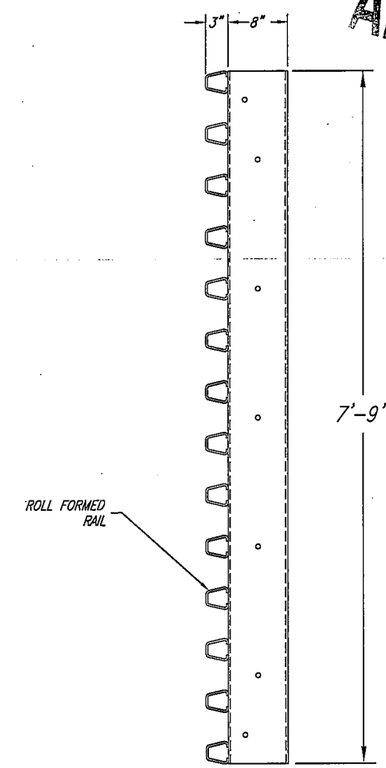

SECTION B-B

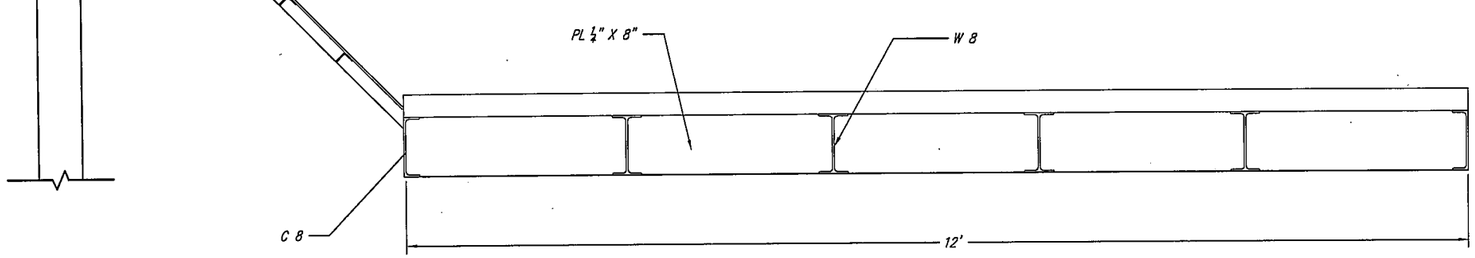

SECTION A-A

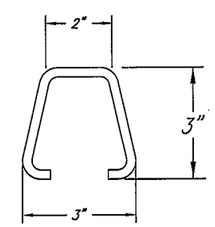

RAIL DETAIL

ROADWAY: MIN. WIDTH 20' – MAX. WIDTH 24'

PROJECT ENGINEER				SCALE: N.T.S.	DESIGNED BWS	JA JONES & ASSOCIATES	CONSULTING ENGINEERS
DATE	REV.	DATE	APPR.		DRAWN JSC		1716 East 5600 South
					CHECKED KLJ		South Ogden, Utah 84403 (801) 476-9767

BOX ELDER COUNTY

PUBLIC WORKS STANDARDS

CATTLE GUARD DETAIL

SHEET: 12 OF 12 SHEETS